NOTES:

(N1) 1. FIT / FORM / FUNCTION SHALL FOLLOW PS-E.008.

BILL OF MATERIAL (CURRENT LEVEL)

ITEM	PT/ASSY	DESCRIPTION	TYPE	QTY.
1	2-132	BAR SPOUT ASM	ASSEMBLY	1
2	2-435	CROSS HANDLE ASM	ASSEMBLY	2
3	10517	NUT - DOME HEX	PART	2
4	2-239	SINGLE HOLE CROSS BAR ASSEMBLY	ASSEMBLY	1

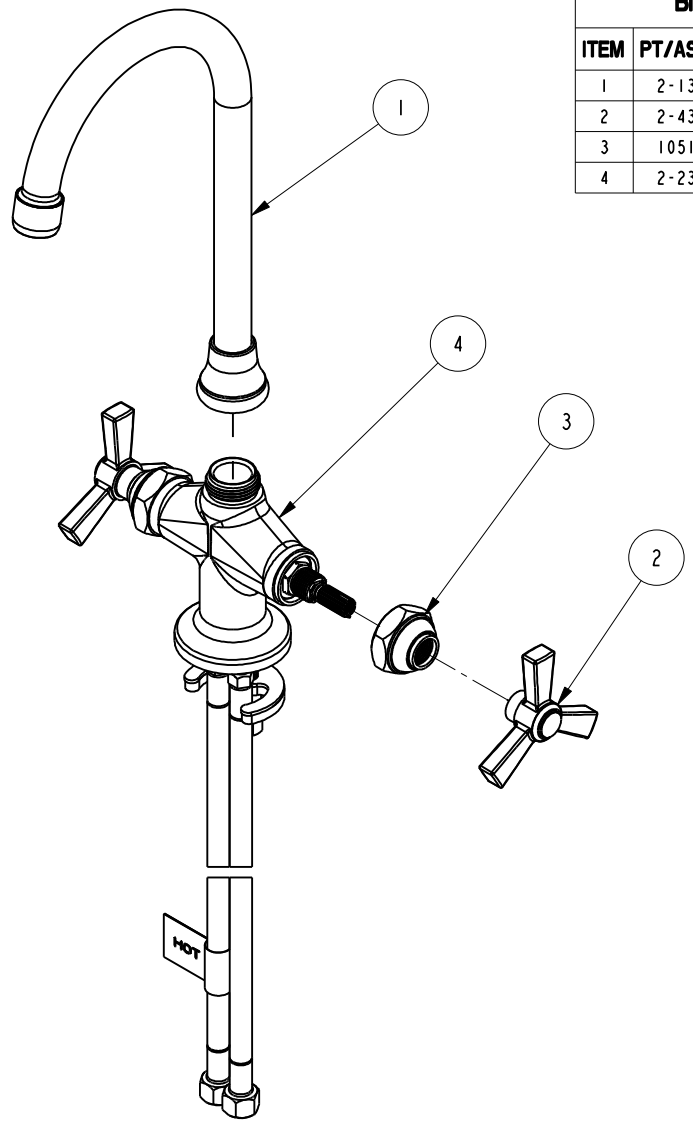

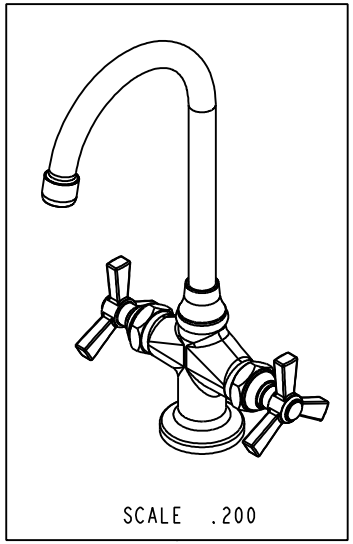

ZONE	REV	DESCRIPTION	DATE	APPROVED
-	D	EN-2643	01/15/16	J.M
-	C	EN-2119	07/25/12	-
-	B	EO-1073	08/15/08	-
-	A	EO-0274	10/20/03	-

COPYRIGHT 2005 BRASSTECH, INC. THESE DRAWINGS AND THE DESIGNS DEPICTED HEREIN ARE THE PROPRIETARY PROPERTY OF BRASSTECH. ANY USE OR REPRODUCTION IS SUBJECT TO THE EXPRESS APPROVAL OF BRASSTECH. UNAUTHORIZED USE IS STRICTLY PROHIBITED. ALL RIGHTS RESERVED.

TESTING	-	-	-
ASSEMBLY	-	-	-
PLATING	-	-	-
POLISHING	-	NEXT ASSY	USED ON
MACHINING	-	APPLICATION	
TOOLING FIXTURE #		REMOVE ALL BURRS AND SHARP EDGES	

UNITS ARE: INCHES [MM]
TOLERANCES ARE:

FRACTIONS	DECIMALS	ANGLES
±1/16"	.X ±.1 [2,5]	±1°
	.XX ±.06 [1,5]	

(X.XXX) DENOTES CRITICAL DIMS.
ALL THREADS ARE CRITICAL

DRAWN	RAVINDRA	12/23/15
CHECKED	JINSON	12/23/15
APPROVED	J.M	01/15/16

BRASSTECH INCORPORATED
2001 CARNEGIE AVE.
SANTA ANA, CA 92705
(949) 417-5207

Joe Manga

Digitally signed by Joe Manga
DN: cn=Joe Manga, o, ou=Brasstech Inc., email=jmanga@brasstech.com, c=US
Date: 2016.01.27 11:45:54 -08'00'

BAR FAUCET

DWG NO.	REV
1608	D

SCALE .275 | REF. - | SHEET 1 OF 2

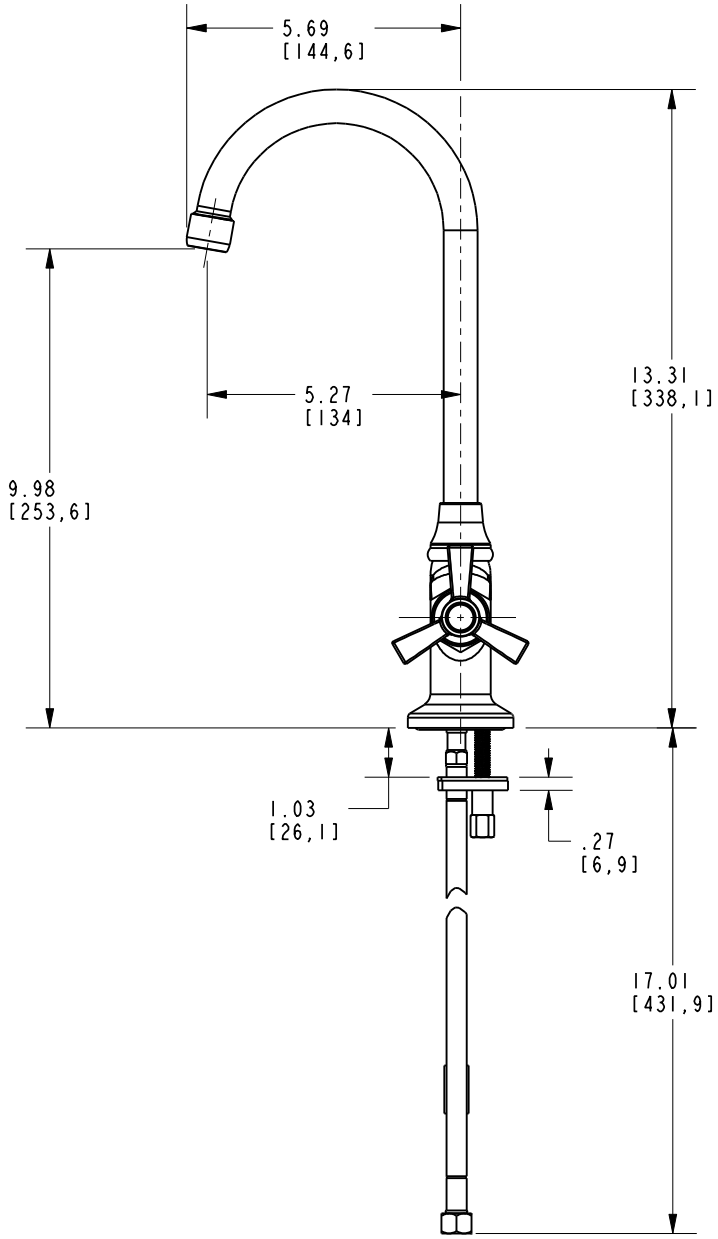

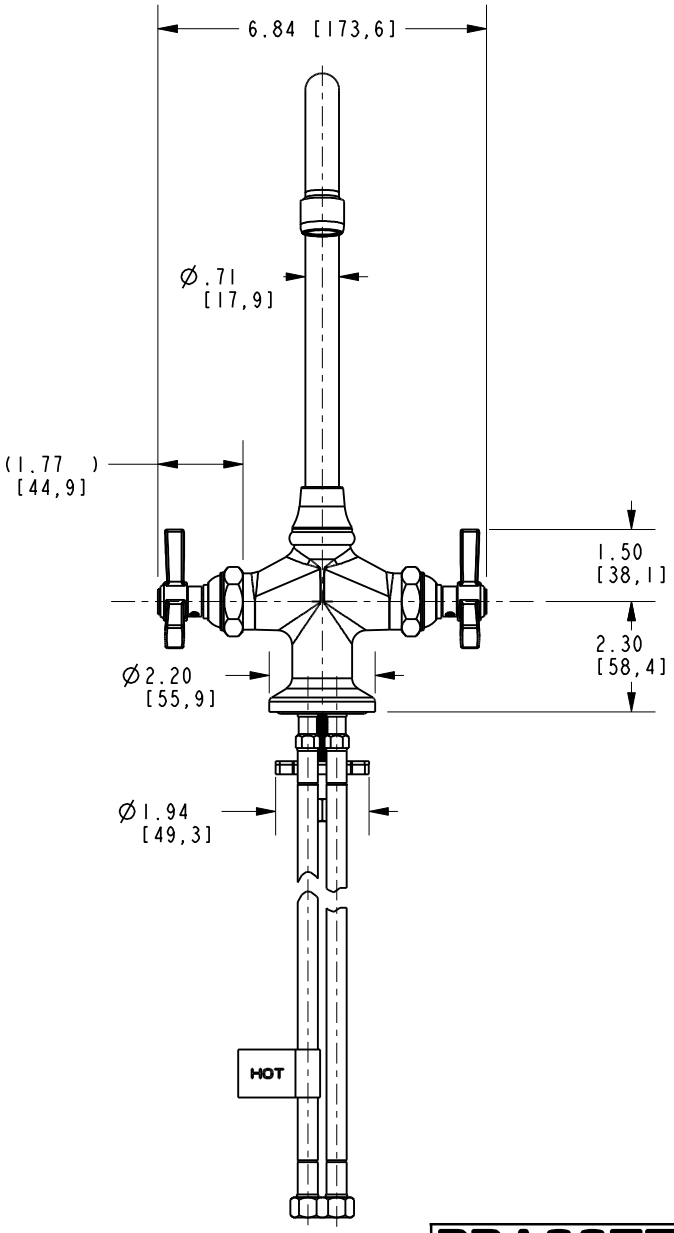

BRASSTECH INCORPORATED

2001 E. CARNEGIE AVE.
SANTA ANA, CA 92705
(949) 417-5207

DWG NO.	REV
1608	D

SCALE	REF.	SHEET
.250	-	2 OF 2