NOTES:

1. FIT / FORM / FUNCTION SHALL FOLLOW PS-E.008.

BILL OF MATERIAL (CURRENT LEVEL)

ITEM	PT/ASSY	DESCRIPTION	TYPE	QTY.
1	92526	HOT MOP ADAPTER - LARGE	PART	1

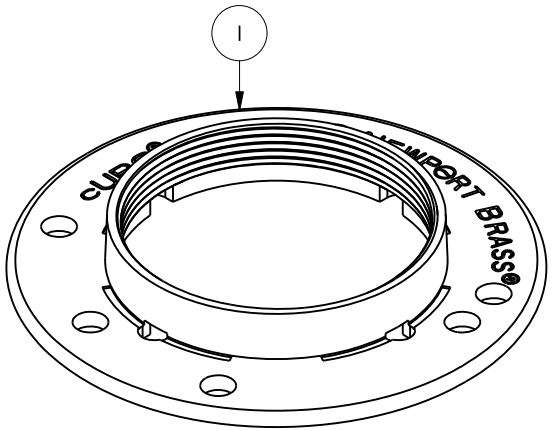

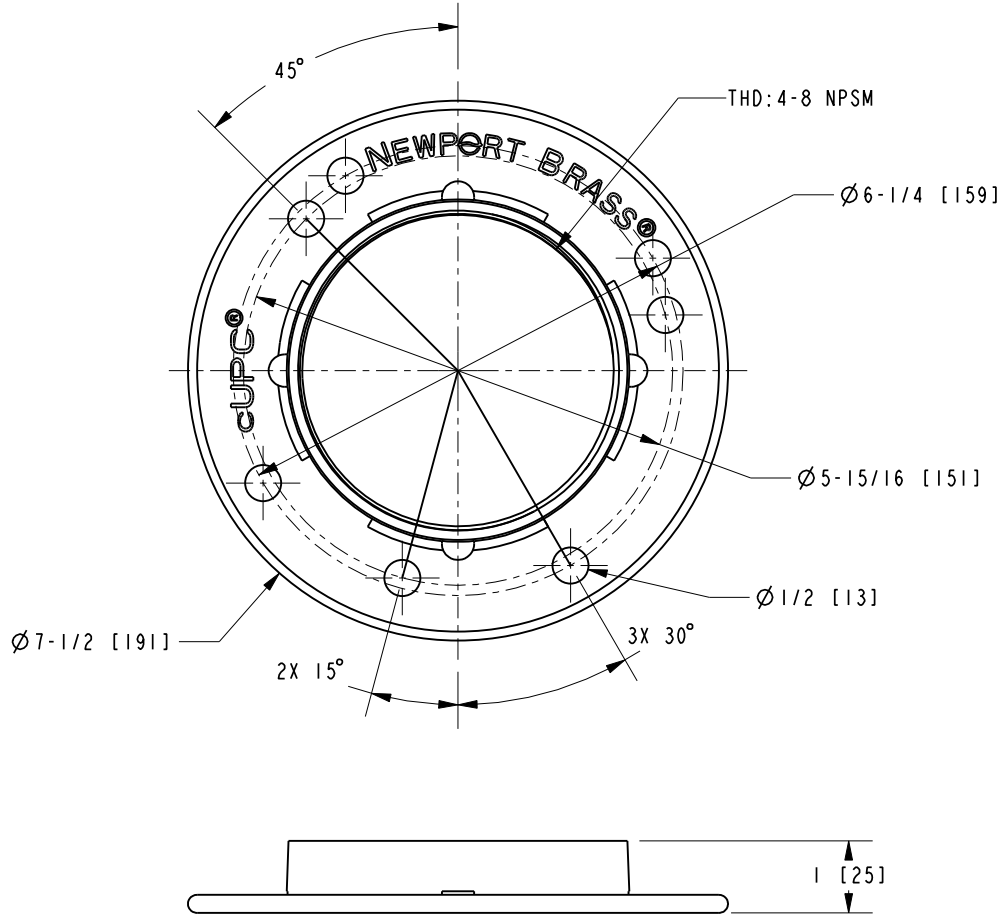

Joe Manga

Digitally signed by Joe Manga
Date: 2019.04.15 08:16:30 -07'00'

ZONE	REV	DESCRIPTION	DATE	APPROVED
-	A	EN-3849	04/12/19	J.M.
-	-	EN-2684	09/04/14	J.M.

COPYRIGHT 2005 BRASSTECH, INC.
THESE DRAWINGS AND THE DESIGNS DEPICTED HEREIN ARE THE PROPRIETARY PROPERTY OF BRASSTECH. ANY USE OR REPRODUCTION IS SUBJECT TO THE EXPRESS APPROVAL OF BRASSTECH. UNAUTHORIZED USE IS STRICTLY PROHIBITED. ALL RIGHTS RESERVED.

TESTING	-	-	-
ASSEMBLY	-	-	-
PLATING	-		
POLISHING	-	NEXT ASSY	USED ON
MACHINING	-	APPLICATION	
TOOLING FIXTURE #		REMOVE ALL BURRS AND SHARP EDGES	

UNITS ARE: INCHES [MM]
TOLERANCES ARE:
FRACTIONS ±1/16" DECIMALS .X ±.1 [2,5] .XX ±.06 [1,5] ANGLES ±1°
(X.XXX) DENOTES CRITICAL DIMS.
ALL THREADS ARE CRITICAL

DRAWN	-	-
CHECKED	-	-
APPROVED	-	-

BRASSTECH INCORPORATED
2001 CARNEGIE AVE.
SANTA ANA, CA 92705
(949) 417-5207

HOT MOP ADAPTER - LARGE

DWG NO. 277-02A REV A

SCALE .375 REF. - SHEET 1 OF 1