NOTES:

(N1) 1. FIT / FORM / FUNCTION SHALL FOLLOW PS-E.008.

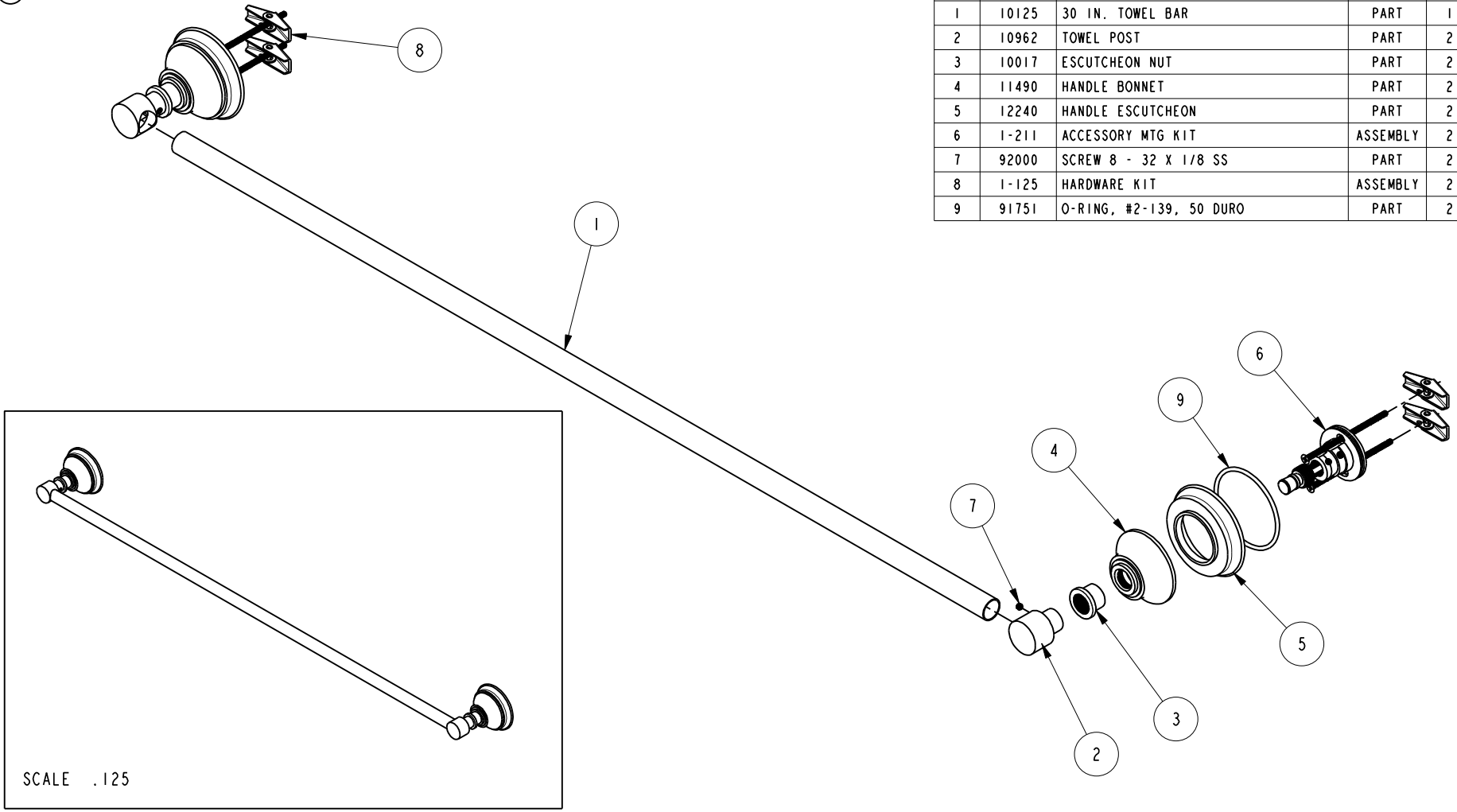

BILL OF MATERIAL (CURRENT LEVEL)

ITEM	PT/ASSY	DESCRIPTION	TYPE	QTY.
1	10125	30 IN. TOWEL BAR	PART	1
2	10962	TOWEL POST	PART	2
3	10017	ESCUTCHEON NUT	PART	2
4	11490	HANDLE BONNET	PART	2
5	12240	HANDLE ESCUTCHEON	PART	2
6	1-211	ACCESSORY MTG KIT	ASSEMBLY	2
7	92000	SCREW 8 - 32 X 1/8 SS	PART	2
8	1-125	HARDWARE KIT	ASSEMBLY	2
9	91751	O-RING, #2-139, 50 DURO	PART	2

ZONE	REV	DESCRIPTION	DATE	APPROVED
-	C	EN-3722	02/08/19	C.G.
-	B	EN-2510b	07/12/13	-
-	A	EN-1241	12/09/09	-
-	-	E0-0320	02/27/04	-

COPYRIGHT 2005 BRASSTECH, INC. THESE DRAWINGS AND THE DESIGNS DEPICTED HEREIN ARE THE PROPRIETARY PROPERTY OF BRASSTECH. ANY USE OR REPRODUCTION IS SUBJECT TO THE EXPRESS APPROVAL OF BRASSTECH. UNAUTHORIZED USE IS STRICTLY PROHIBITED. ALL RIGHTS RESERVED.

TESTING	-	-	-
ASSEMBLY	-	-	-
PLATING	-	-	-
POLISHING	-	NEXT ASSY	USED ON
MACHINING	-	APPLICATION	
TOOLING FIXTURE #		REMOVE ALL BURRS AND SHARP EDGES	

UNITS ARE: INCHES [MM]
TOLERANCES ARE:
FRACTIONS ±1/16" DECIMALS .X ±.1 [2,5] .XX ±.06 [1,5] ANGLES ±1°
(X.XXX) DENOTES CRITICAL DIMS.
ALL THREADS ARE CRITICAL

DRAWN	MANJUNATH	02/08/19
CHECKED	C.G.	02/08/19
APPROVED	C.G.	02/08/19

BRASSTECH INCORPORATED
2001 CARNEGIE AVE.
SANTA ANA, CA 92705
(949) 417-5207

SINGLE TOWEL BAR, 30"

DWG NO. 30-03 REV C

SCALE .250 REF. - SHEET 1 OF 2

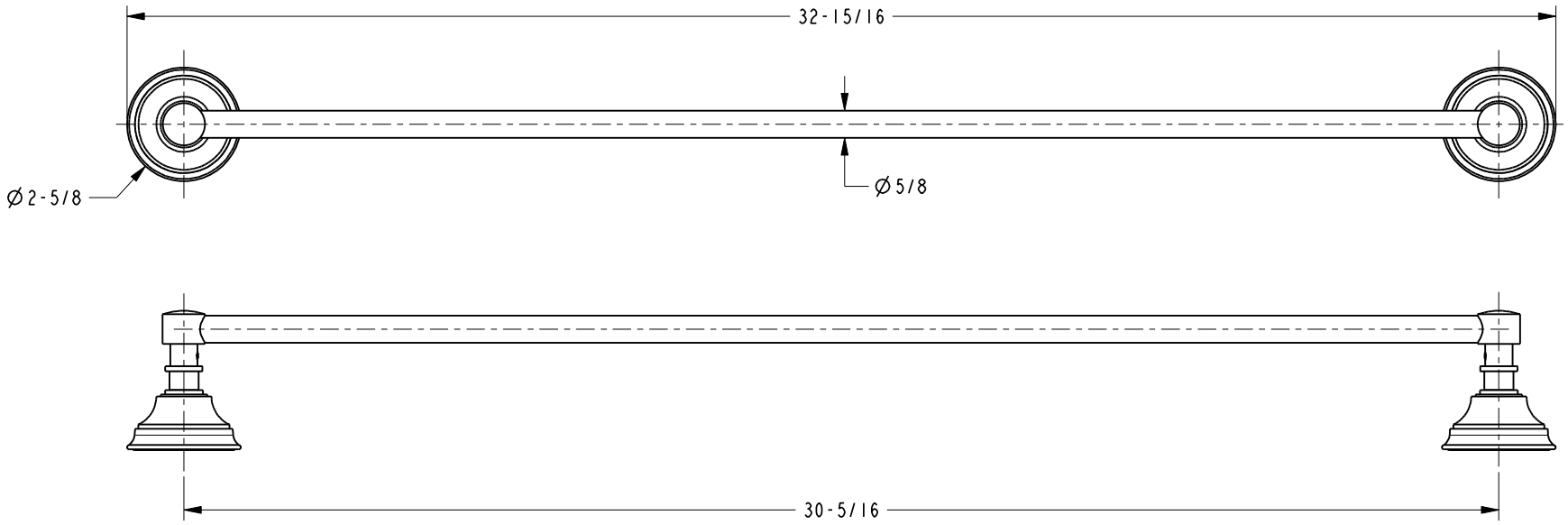

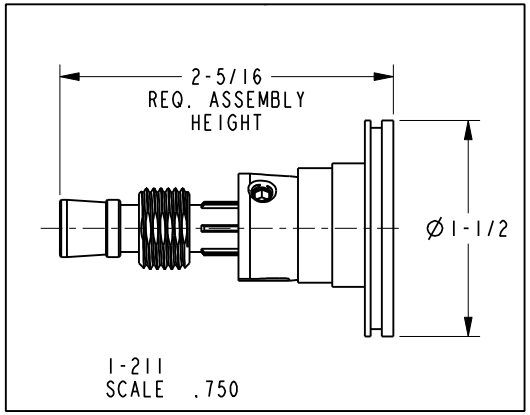

BRASSTECH
INCORPORATED

2001 E. CARNEGIE AVE.
SANTA ANA, CA 92705
(949) 417-5207

DWG NO.	REV
30-03	C

SCALE	REF.	SHEET
.250	-	2 OF 2