NOTES:

1. TO INSPECT ASSEMBLY, FOLLOW FIRST ARTICLE AND IN PROCESS INSPECTION SHEET.
2. SEAL NUT 10259 IN A PLASTIC BAG AND TAPE TO THE BACK OF THE TRIM PLATE.

BILL OF MATERIAL (CURRENT LEVEL)

ITEM	PT/ASSY	DESCRIPTION	TYPE	QTY.
1	8-011	BP SHOWER PLATE ASM	ASSEMBLY	1
2	20-298	BP LEVER HANDLE ASM	ASSEMBLY	1
3	10259	HEX NUT 9/16 X 20 MADE	PART	1

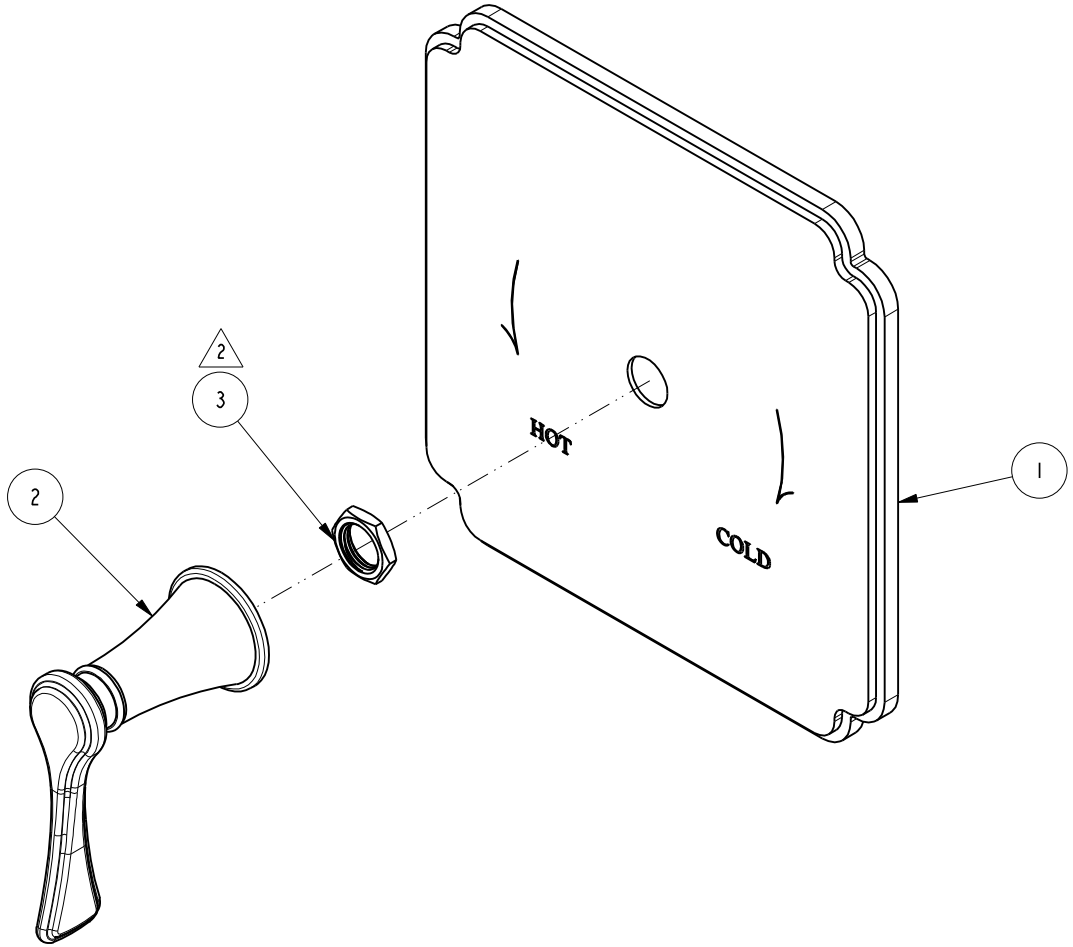

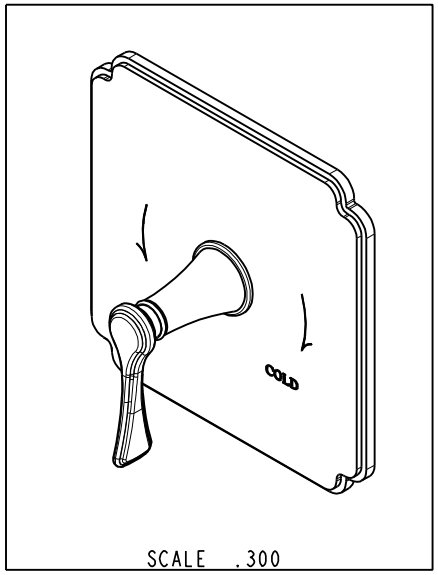

ZONE	REV	DESCRIPTION	DATE	APPROVED
-	D	EN-4441	04/18/22	N.S.
-	C	EN-4300e	04/28/21	R.S.
-	B	EN-3435	01/18/18	J.A.
-	A	EN-2027b	07/07/15	AN
-	-	EN-1735	06/10/11	JM

Ned M. Santos Digitally signed by Ned M. Santos Date: 2022.06.28 17:39:38 -07'00'

COPYRIGHT 2005 BRASSTECH, INC. THESE DRAWINGS AND THE DESIGNS DEPICTED HEREIN ARE THE PROPRIETARY PROPERTY OF BRASSTECH. ANY USE OR REPRODUCTION IS SUBJECT TO THE EXPRESS APPROVAL OF BRASSTECH. UNAUTHORIZED USE IS STRICTLY PROHIBITED. ALL RIGHTS RESERVED.

TESTING	-	-	-
ASSEMBLY	-	-	-
PLATING	-	-	-
POLISHING	-	NEXT ASSY	USED ON
MACHINING	-	APPLICATION	
TOOLING FIXTURE #		REMOVE ALL BURRS AND SHARP EDGES	

UNITS ARE: INCHES [MM]
TOLERANCES ARE:
FRACTIONS ±1/16" DECIMALS .X ±.1 [2,5] .XX ±.06 [1,5] ANGLES ±1°
(X.XXX) DENOTES CRITICAL DIMS.
ALL THREADS ARE CRITICAL

DRAWN	J.T.	04/18/22
CHECKED	N.S.	04/18/22
APPROVED	N.S.	04/18/22

BRASSTECH INCORPORATED
2001 CARNEGIE AVE.
SANTA ANA, CA 92705
(949) 417-5207

BP SHOWER TRIM PLATE W/ LEVER HANDLE

DWG NO. 4-2534BP REV D

SCALE .500 REF. - SHEET 1 OF 2

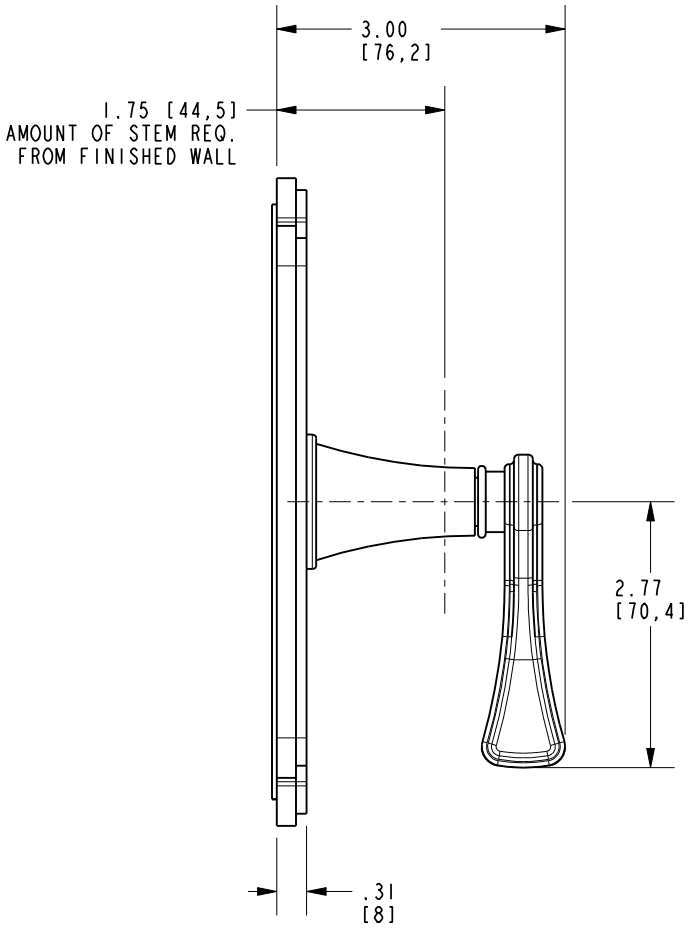

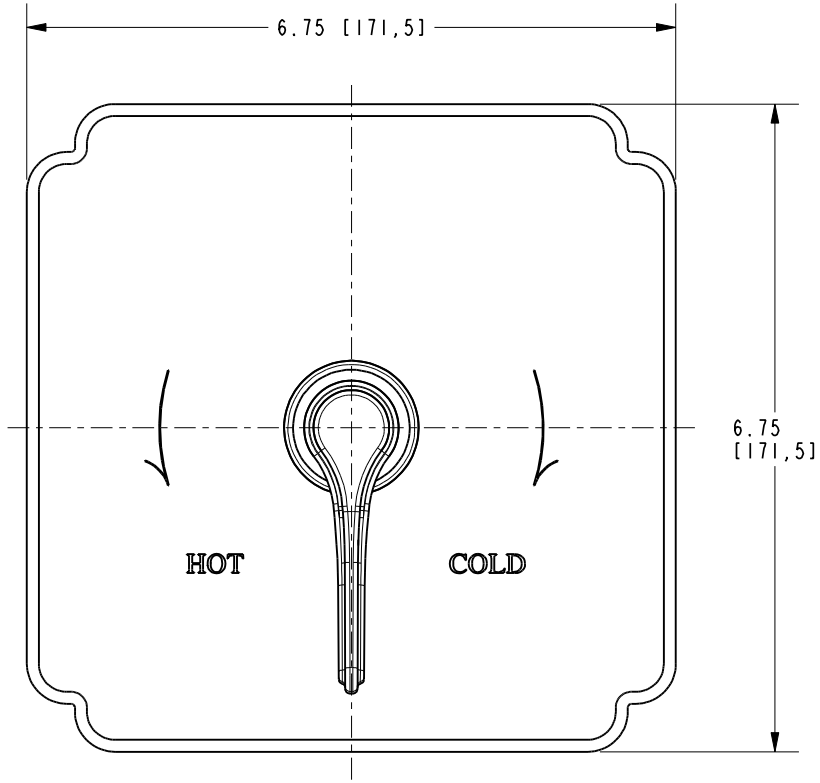

BRASSTECH INCORPORATED

2001 E. CARNEGIE AVE.
SANTA ANA, CA 92705
(949) 417-5207

DWG NO.	REV
4-2534BP	D

SCALE	REF.	SHEET
.500	-	2 OF 2