NOTES:

N1 1. FIT / FORM / FUNCTION SHALL FOLLOW PS-E.008.

N2 2. HANDLE IN CLOSE POSITION.

N3 3. INSTALLATION TORQUE 11-14 LB-FT.

N4 4. INSTALLATION TORQUE 4-6 LB-FT.

N5 5. APPLY LOCTITE 680.

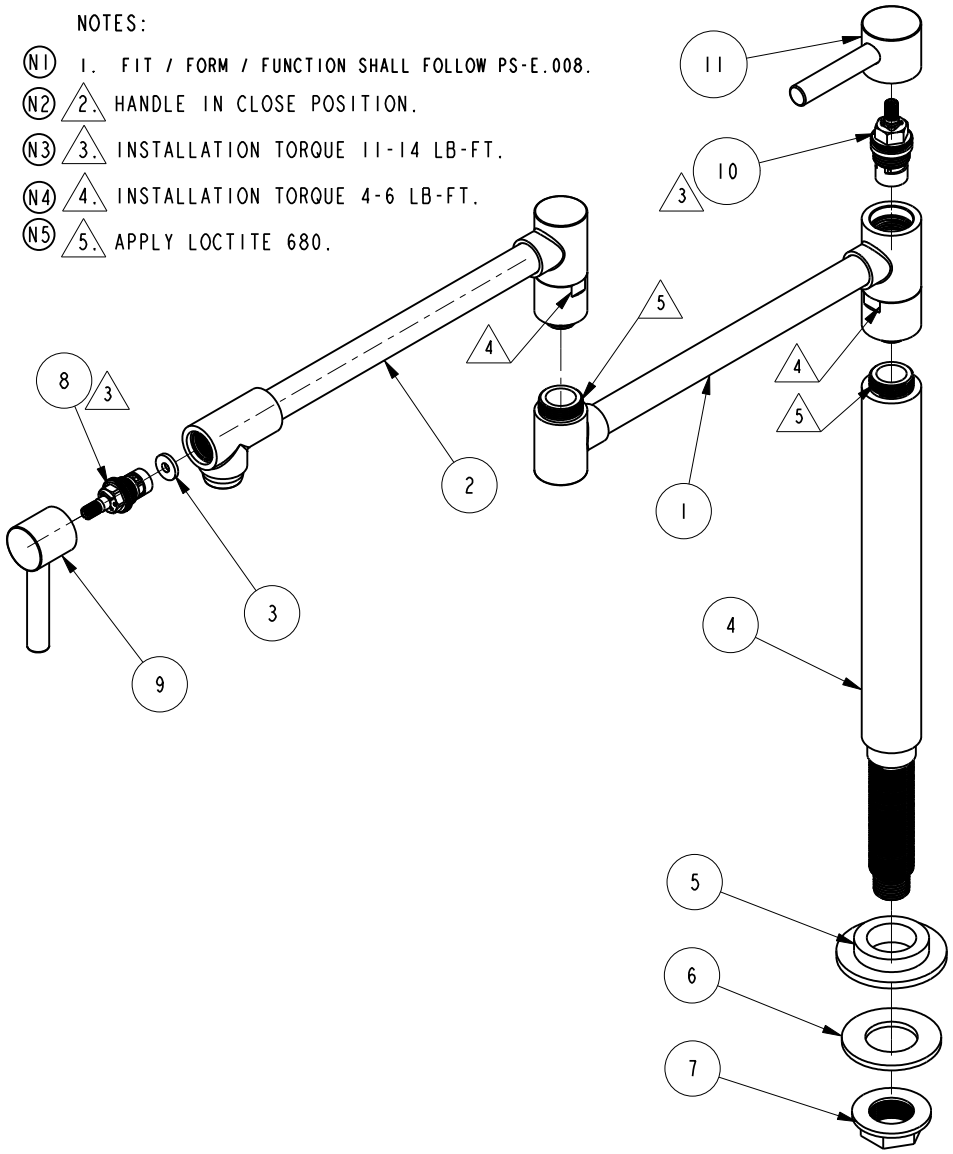

BILL OF MATERIAL (CURRENT LEVEL)

ITEM	PT/ASSY	DESCRIPTION	TYPE	QTY.
1	2-554	LOWER ARM ASM, CONTEMP	ASSEMBLY	1
2	2-552	UPPER ARM ASM, CONTEMP	ASSEMBLY	1
3	91325	WSHR, .23 ID X .625 OD X .093 THK, FLT, NEOPRENE	PART	1
4	11315	RISER SHANK, CONTEMP	PART	1
5	2-557	FLANGE ASM, CONTEMP	ASSEMBLY	1
6	92229	WSHR, 1.187 ID X 2.25 OD X .136-.176 THK, FLT, ZnPLATED	PART	1
7	91473	FLANGE NUT 1.006"-20	PART	1
8	1-134	CARTR 3/8 HOT 1/4 TR	PART	1
9	2-547	LEVER HANDLE ASM, CONTEMP	ASSEMBLY	1
10	1-006	C/S VALVE CARTRIDGE - HOT	PART	1
11	2-548	LEVER HANDLE ASM, CONTEMP	ASSEMBLY	1

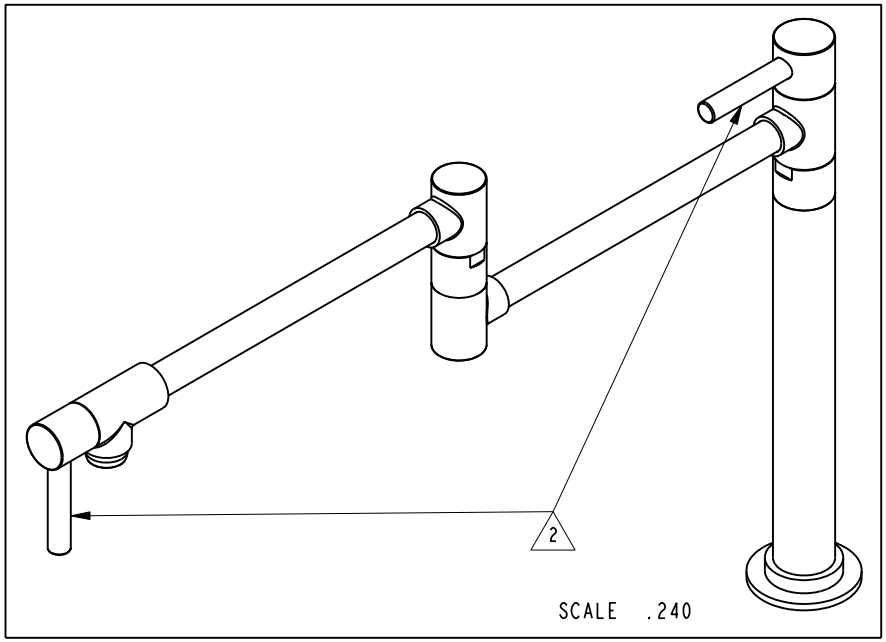

ZONE	REV	DESCRIPTION	DATE	APPROVED
-	E	EN-2874	10/06/15	N.S
-	D	EN-2920	09/11/15	H.LE
-	C	EN-2528	05/08/13	-
-	B	EO-0770	10/12/06	-
-	A	EO-0701	08/25/06	-
-	-	EO-0641	01/18/06	-

Ned M. Santos

Digitally signed by Ned M. Santos
DN: cn=Ned M. Santos, o=Brasstech, Inc., ou=Product Engineering, email=nsantos@brasstech.com, c=US
Date: 2015.10.20 11:11:13 -07'00'

COPYRIGHT 2005 BRASSTECH, INC. THESE DRAWINGS AND THE DESIGNS DEPICTED HEREIN ARE THE PROPRIETARY PROPERTY OF BRASSTECH. ANY USE OR REPRODUCTION IS SUBJECT TO THE EXPRESS APPROVAL OF BRASSTECH. UNAUTHORIZED USE IS STRICTLY PROHIBITED. ALL RIGHTS RESERVED.

TESTING	-	-	-
ASSEMBLY	-	-	-
PLATING	-	-	-
POLISHING	-	NEXT ASSY	USED ON
MACHINING	-	APPLICATION	
TOOLING FIXTURE #		REMOVE ALL BURRS AND SHARP EDGES	

UNITS ARE: INCHES [MM]
TOLERANCES ARE:
FRACTIONS ±1/16" DECIMALS .X ±.1 [2.5] .XX ±.06 [1.5] ANGLES ±1°

(X.XXX) DENOTES CRITICAL DIMS.
ALL THREADS ARE CRITICAL

DRAWN	AMARISH	10/06/15
CHECKED	JINSON	10/06/15
APPROVED	RAVINDRA	10/06/15

BRASSTECH INCORPORATED
2001 CARNEGIE AVE.
SANTA ANA, CA 92705
(949) 417-5207

POT FILLER, DECK, LEVER, CONTEMP

DWG NO. 9486 REV E

SCALE .230 REF. - SHEET 1 OF 2

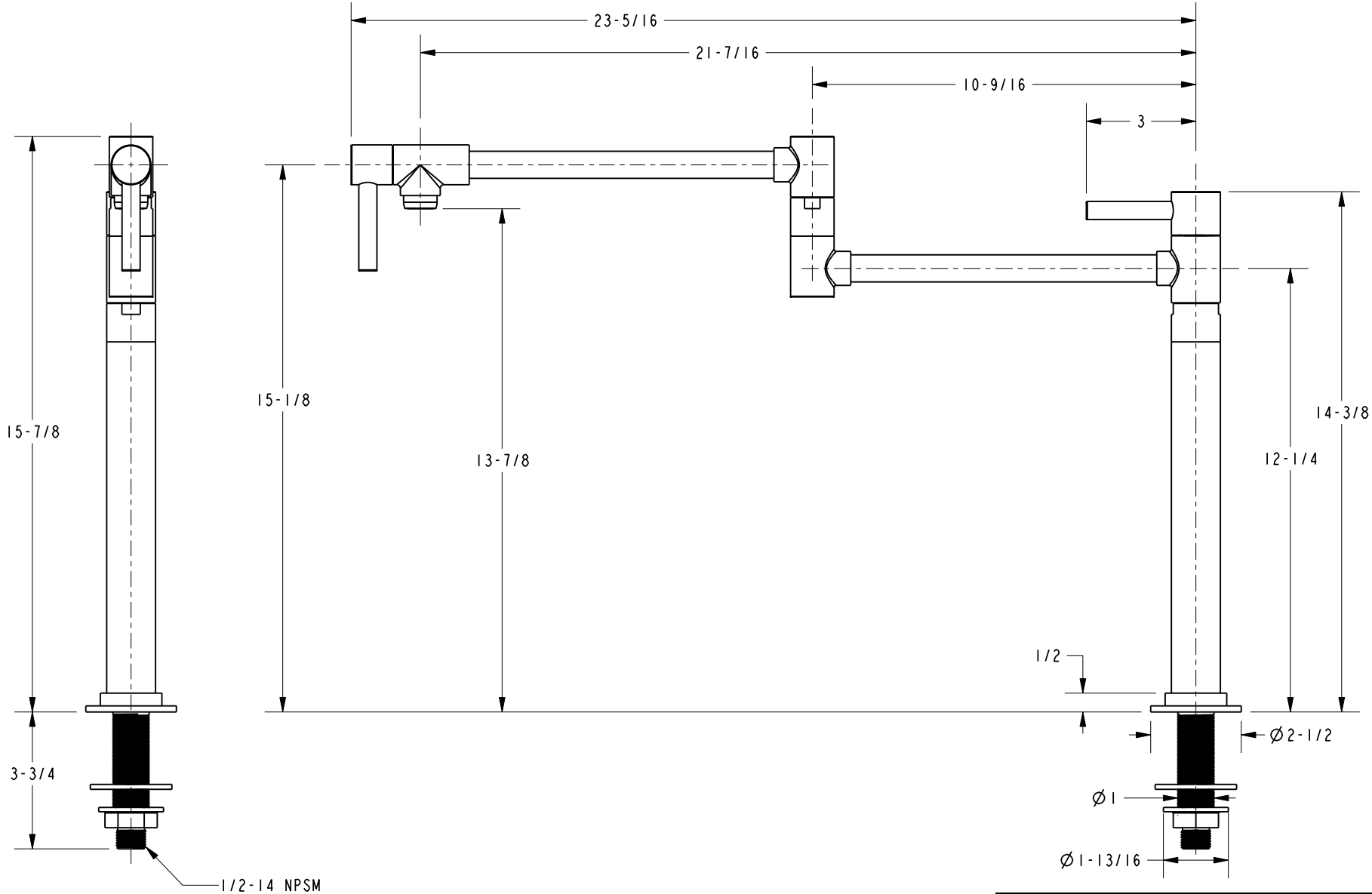

BRASSTECH INCORPORATED
2001 E. CARNEGIE AVE.
SANTA ANA, CA 92705
(949) 417-5207

DWG NO.	REV
9486	E

SCALE	REF.	SHEET
.250	-	2 OF 2