NOTES:

1. TO INSPECT ASSEBMLY, FOLLOW FIRST ARTICLE AND IN PROCESS INSPECTION SHEET.

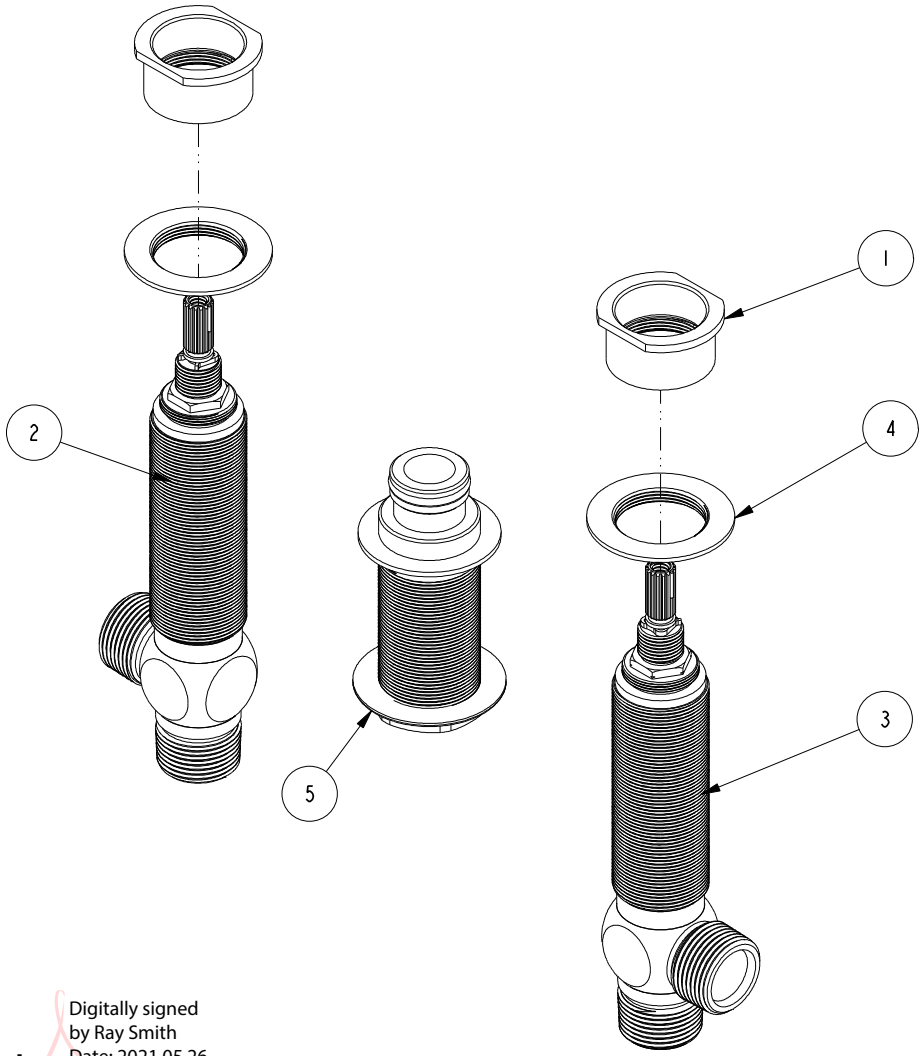

BILL OF MATERIAL (CURRENT LEVEL)

ITEM	PT/ASSY	DESCRIPTION	TYPE	QTY.
1	12280	R/T-INVERT_FLANGE NUT	PART	2
2	1-552	R/T CART / VALVE ASSY - HOT	ASSEMBLY	1
3	1-553	R/T CARTR / VALVE ASSY - COLD	ASSEMBLY	1
4	10529	MOUNTING NUT	PART	2
5	1-254	R/T NIPPLE ASM	ASSEMBLY	1

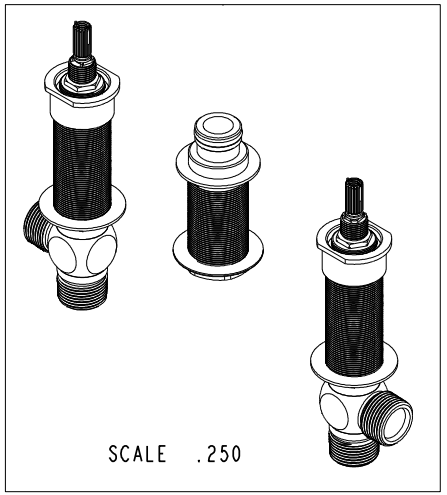

Ray Smith

Digitally signed by Ray Smith
Date: 2021.05.26 16:13:25 -04'00'

ZONE	REV	DESCRIPTION	DATE	APPROVED
-	D	EN-4300kk	03/22/21	R.S.
-	C	EN-4166	05/04/20	J.M.
-	B	EN-3271A	12/16/17	J.A.
-	A	EN-1735	06/10/11	-
-	-	EO-1003	05/30/08	-

COPYRIGHT 2005 BRASSTECH, INC. THESE DRAWINGS AND THE DESIGNS DEPICTED HEREIN ARE THE PROPRIETARY PROPERTY OF BRASSTECH. ANY USE OR REPRODUCTION IS SUBJECT TO THE EXPRESS APPROVAL OF BRASSTECH. UNAUTHORIZED USE IS STRICTLY PROHIBITED. ALL RIGHTS RESERVED.

TESTING	-	-	-
ASSEMBLY	-	-	-
PLATING	-	-	-
POLISHING	-	NEXT ASSY	USED ON
MACHINING	-	APPLICATION	
TOOLING FIXTURE #		REMOVE ALL BURRS AND SHARP EDGES	

UNITS ARE: INCHES [MM]
TOLERANCES ARE:
FRACTIONS ±1/16" DECIMALS .X ±.1 [2.5] .XX ±.06 [1.5] ANGLES ±1°
(X.XXX) DENOTES CRITICAL DIMS.
ALL THREADS ARE CRITICAL

DRAWN	JINSON	12/16/17
CHECKED	J.A.	12/16/17
APPROVED	J.A.	12/16/17

BRASSTECH INCORPORATED
2001 CARNEGIE AVE.
SANTA ANA, CA 92705
(949) 417-5207

ROMAN TUB 2-VALVE ROUGH

DWG NO. 1-636 REV D

SCALE .425 REF. - SHEET 1 OF 2

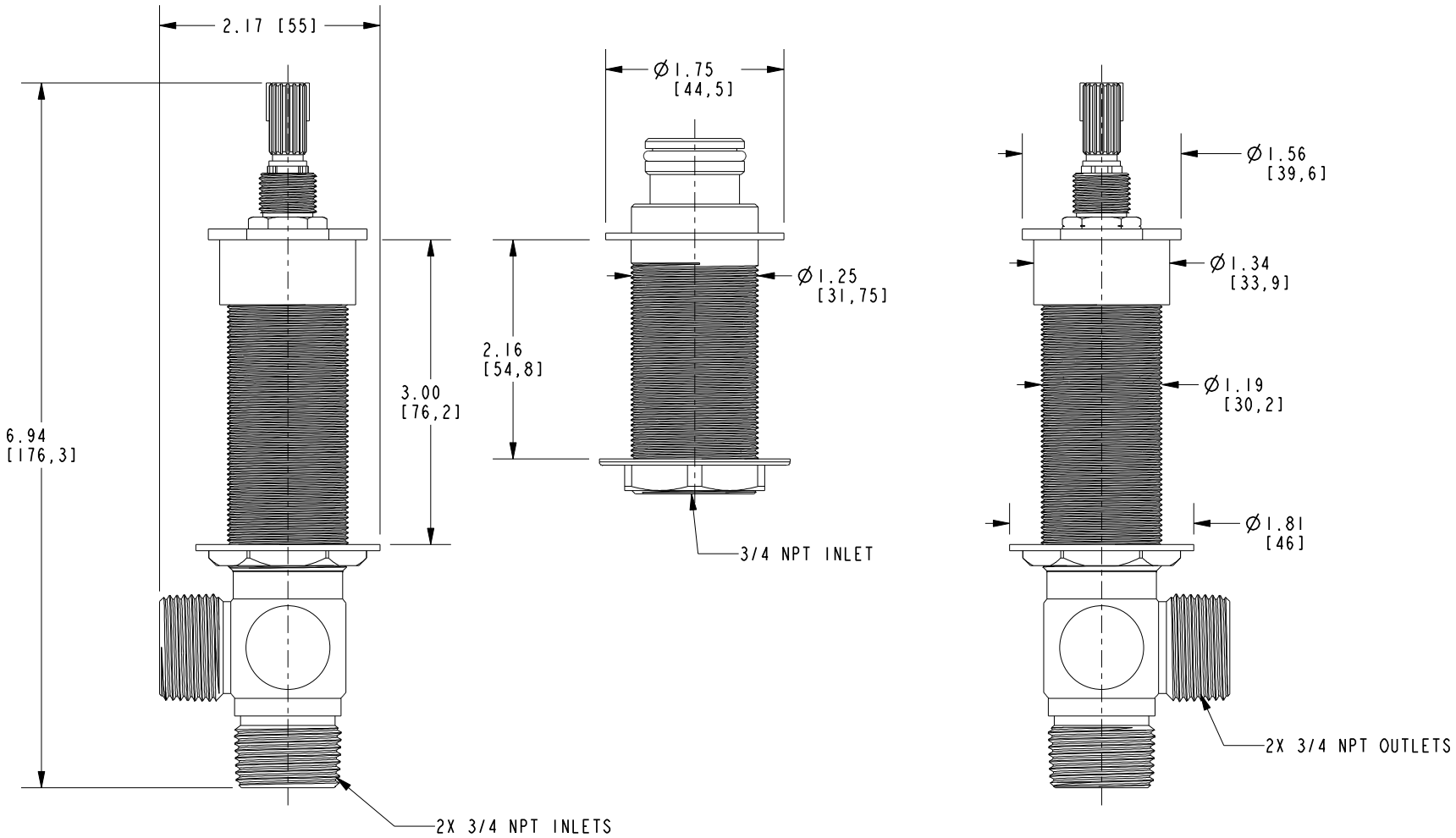

BRASSTECH INCORPORATED

2001 E. CARNEGIE AVE.
SANTA ANA, CA 92705
(949) 417-5207

DWG NO.	REV
1-636	D

SCALE	REF.	SHEET
.625	-	2 OF 2