NOTES:

(N1) 1. FIT / FORM / FUNCTION SHALL FOLLOW PS-E.008.

BILL OF MATERIAL (CURRENT LEVEL)

ITEM	PT/ASSY	DESCRIPTION	TYPE	QTY.
1	1-230	R/T QUICK DISCONNECT	ASSEMBLY	1
2	1-580	ROMAN TUB VALVE ASM - HOT	ASSEMBLY	1
3	1-581	ROMAN TUB VALVE ASM - COLD	ASSEMBLY	1
4	1-718	R/T VALVE DIVERTER 20†	ASSEMBLY	1
5	5-057	MOUNTING HDW FOR DECK FLANGE	ASSEMBLY	1
6	10529	MOUNTING NUT	PART	2
7	12280	R/T-INVERT_FLANGE NUT	PART	2
8	12302-XX61	HOSE, 36 INCHES	ASSEMBLY	1

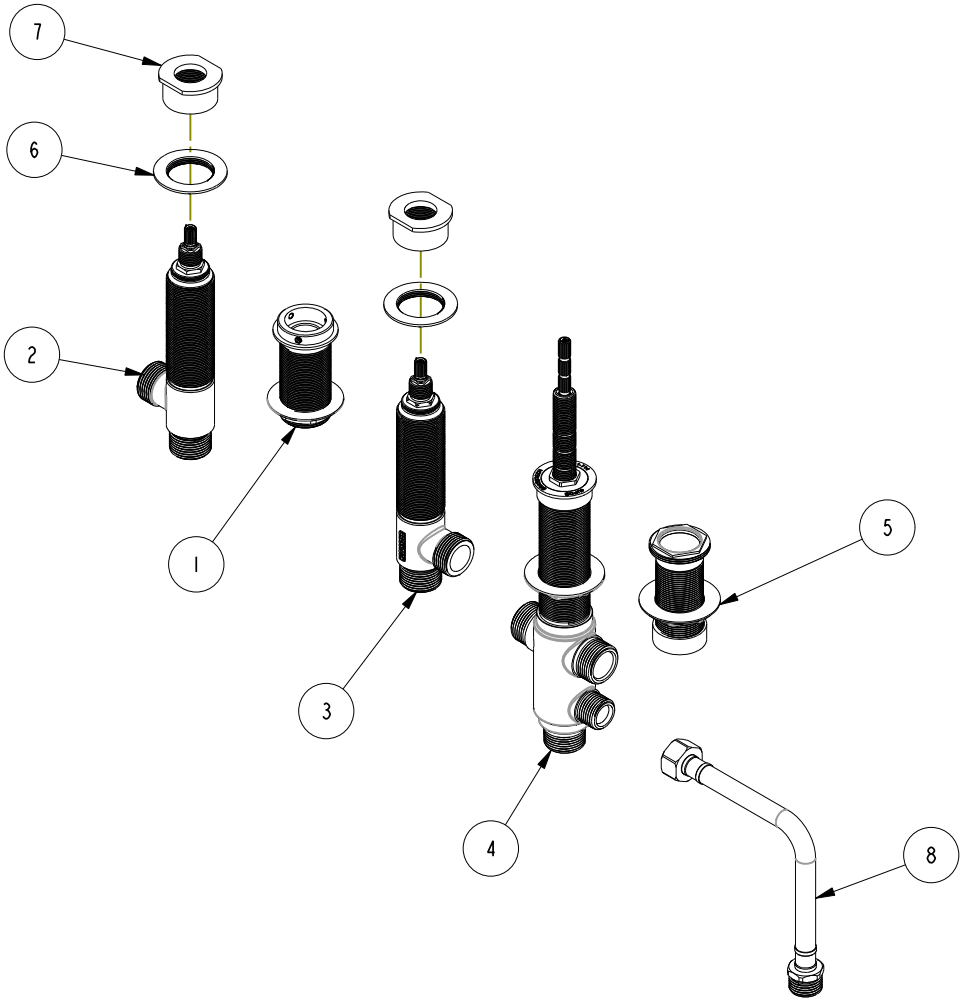

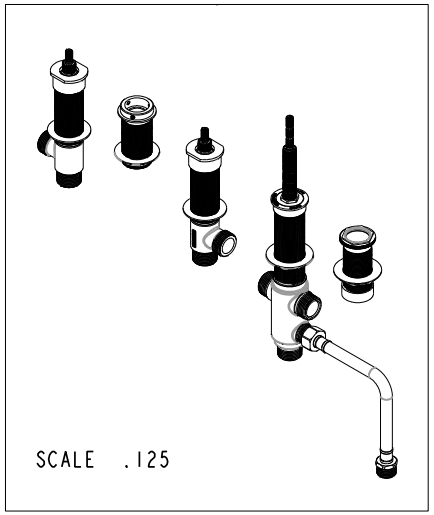

ZONE	REV	DESCRIPTION	DATE	APPROVED
	D	EN-3533	2/2/18	J.A.
-	C	EN-3222E	12/04/17	J.A.
-	B	EN-2541-1	09/05/14	-
-	A	EN-2036	01/17/12	-
-	-	EN-0995-3	01/31/11	-

COPYRIGHT 2005 BRASSTECH, INC. THESE DRAWINGS AND THE DESIGNS DEPICTED HEREIN ARE THE PROPRIETARY PROPERTY OF BRASSTECH. ANY USE OR REPRODUCTION IS SUBJECT TO THE EXPRESS APPROVAL OF BRASSTECH. UNAUTHORIZED USE IS STRICTLY PROHIBITED. ALL RIGHTS RESERVED.

TESTING	-	-	-
ASSEMBLY	-	-	-
PLATING	-	-	-
POLISHING	-	NEXT ASSY	USED ON
MACHINING	-	APPLICATION	
TOOLING FIXTURE #		REMOVE ALL BURRS AND SHARP EDGES	

UNITS ARE: INCHES [MM]
TOLERANCES ARE:
FRACTIONS DECIMALS ANGLES
±1/16" .X ±.1 [2,5] ±1°
.XX ±.06 [1,5]
(X.XXX) DENOTES CRITICAL DIMS.
ALL THREADS ARE CRITICAL

DRAWN	JINSON	12/04/17
CHECKED	J.A.	12/04/17
APPROVED	J.A.	12/04/17

BRASSTECH INCORPORATED
2001 CARNEGIE AVE.
SANTA ANA, CA 92705
(949) 417-5207

R/T 3-VALVE ROUGH

DWG NO. 1-678 REV D

SCALE .212 REF. - SHEET 1 OF 2

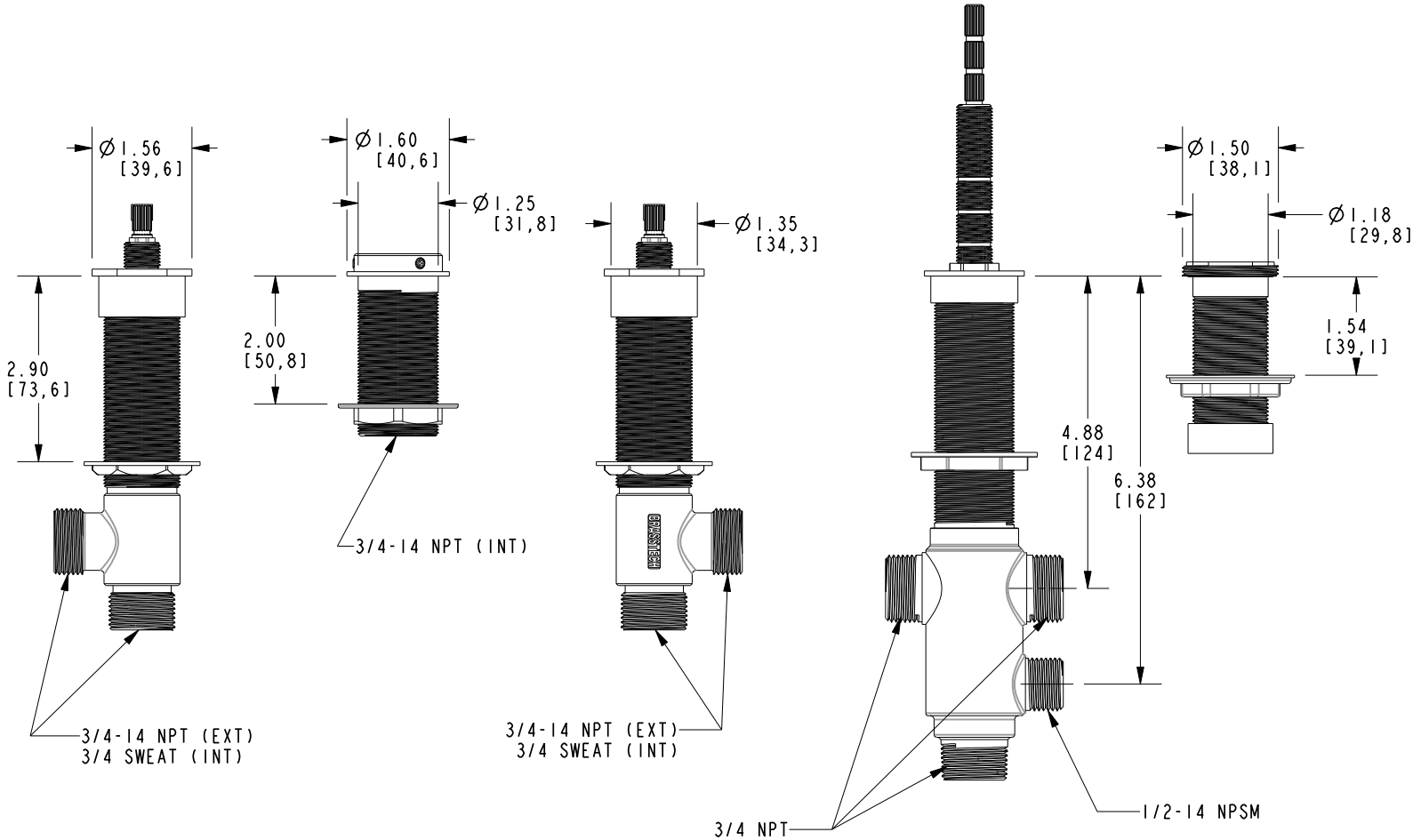

BRASSTECH INCORPORATED	2001 E. CARNEGIE AVE. SANTA ANA, CA 92705 (949) 417-5207	
DWG NO. 1-678		REV D
SCALE .375	REF. -	SHEET 2 OF 2