NOTES:

1. TO INSPECT ASSEMBLY, FOLLOW FIRST ARTICLE AND IN PROCESS INSPECTION SHEET.

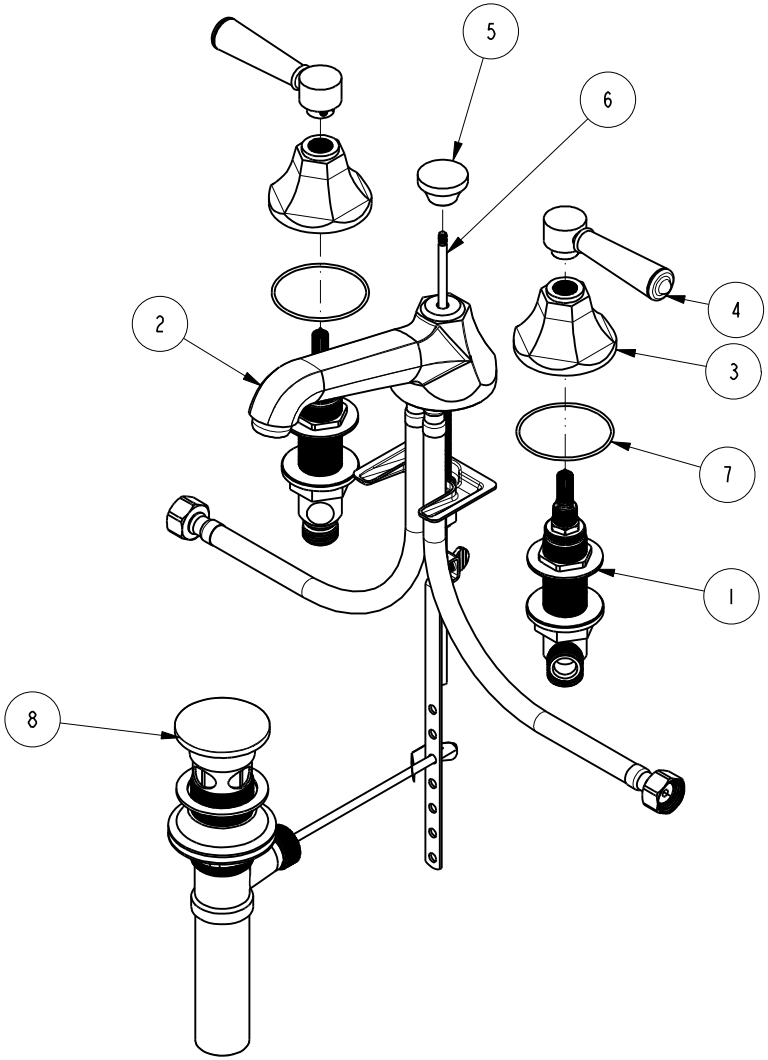

BILL OF MATERIAL (CURRENT LEVEL)

ITEM	PT/ASSY	DESCRIPTION	TYPE	QTY.
1	1-525	W/S VALVE ASM	ASSEMBLY	1
2	3-346	ASSY, SPOUT	ASSEMBLY	1
3	10960	HEX ESCUTCHEON	PART	2
4	2-279	TAPERED LEVER HNDL ASM	ASSEMBLY	2
5	10961	SMOOTH POP - UP KNOB	PART	1
6	10288	3/16" POP UP ROD	PART	1
7	91386	O-RING, #2-034, EPDM, 65-75 DURO	PART	2
8	325	POP UP ASSEMBLY	ASSEMBLY	1

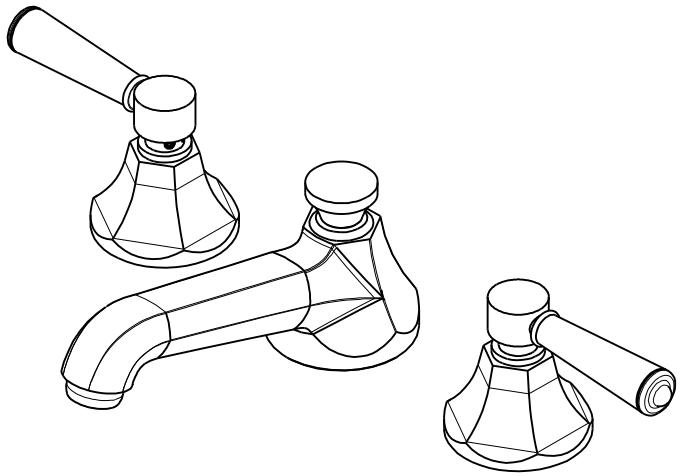

SCALE .325

ZONE	REV	DESCRIPTION	DATE	APPROVED
-	E	EN-4300m	10/29/20	R.S.
-	D	EN-3371	08/04/17	J.M.
-	C	EN-2266	04/04/13	-
-	B	EN-1616	09/13/10	-
-	A	EO-1015	06/10/08	-

COPYRIGHT 2005 BRASSTECH, INC. THESE DRAWINGS AND THE DESIGNS DEPICTED HEREIN ARE THE PROPRIETARY PROPERTY OF BRASSTECH. ANY USE OR REPRODUCTION IS SUBJECT TO THE EXPRESS APPROVAL OF BRASSTECH. UNAUTHORIZED USE IS STRICTLY PROHIBITED. ALL RIGHTS RESERVED.

TESTING	-	-	-
ASSEMBLY	-	-	-
PLATING	-	-	-
POLISHING	-	NEXT ASSY	USED ON
MACHINING	-	APPLICATION	
TOOLING FIXTURE #		REMOVE ALL BURRS AND SHARP EDGES	

UNITS ARE: INCHES [MM]
TOLERANCES ARE:
FRACTIONS ±1/16" DECIMALS .X ±.1 [2,5] .XX ±.06 [1,5] ANGLES ±1°
(X.XXX) DENOTES CRITICAL DIMS.
ALL THREADS ARE CRITICAL

DRAWN	JINSON	10/29/20
CHECKED	R.S.	10/29/20
APPROVED	R.S.	10/29/20

BRASSTECH INCORPORATED
2001 CARNEGIE AVE.
SANTA ANA, CA 92705
(949) 417-5207

WIDESPREAD FAUCET

DWG NO. 1200 REV E

SCALE .225 REF. - SHEET 1 OF 2

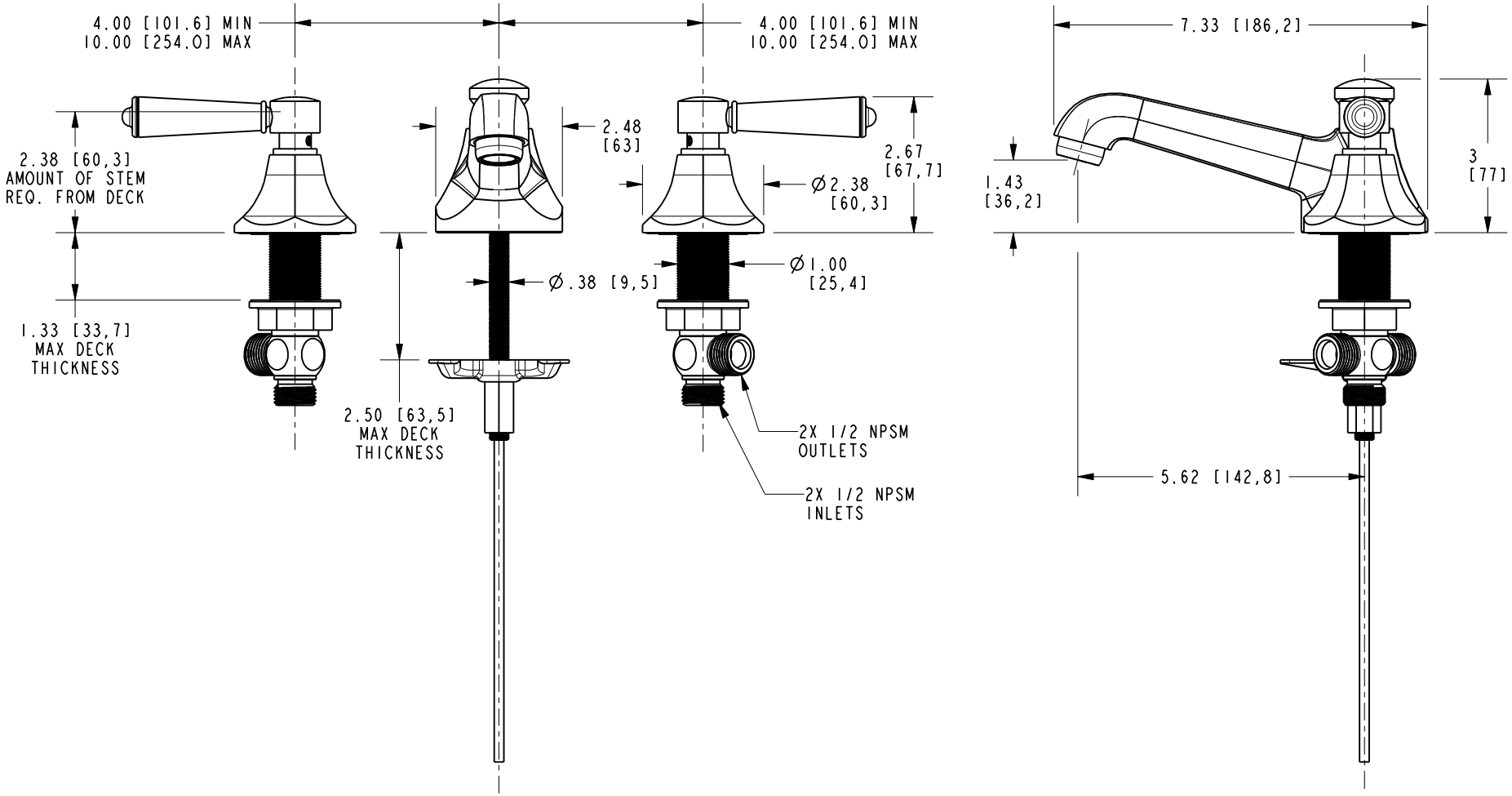

BRASSTECH INCORPORATED

2001 CARNEGIE AVE.
SANTA ANA, CA 92705
(949) 417-5207

DWG NO.	REV
1200	E

SCALE .325	REF. -	SHEET 2 OF 2