NOTES:

1. TO INSPECT ASSEMBLY, FOLLOW FIRST ARTICLE AND IN PROCESS INSPECTION SHEET.

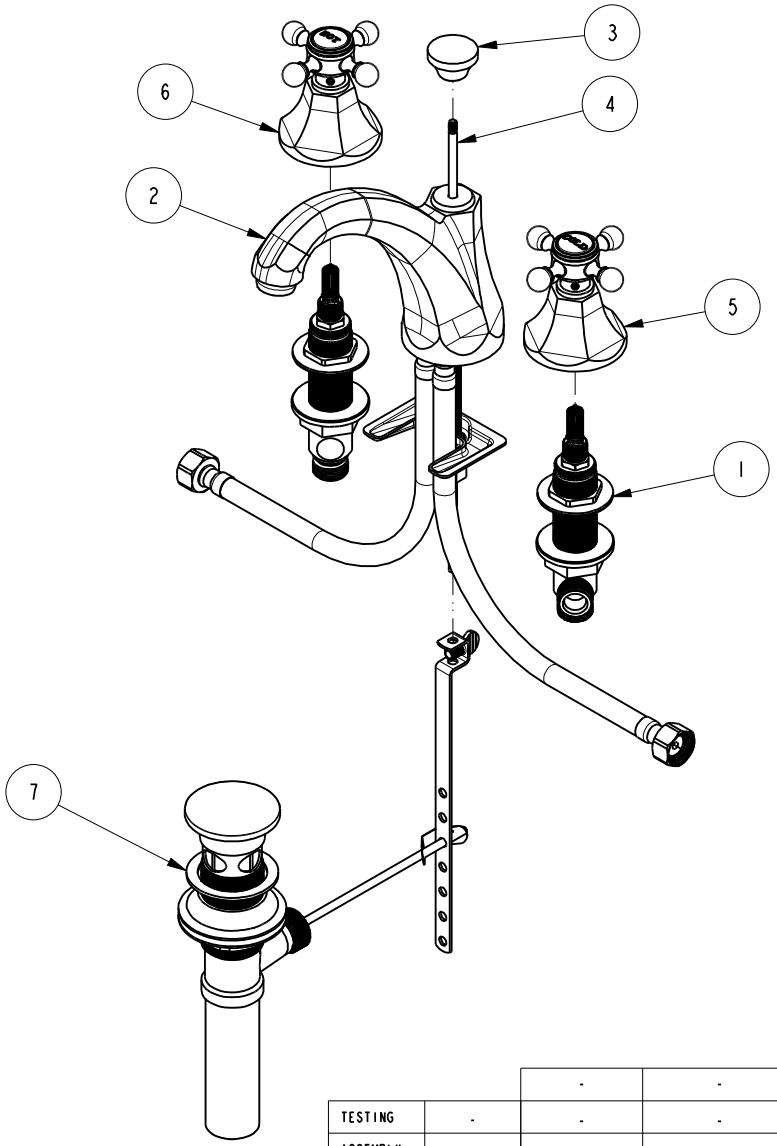

BILL OF MATERIAL (CURRENT LEVEL)

ITEM	PT/ASSY	DESCRIPTION	TYPE	QTY.
1	1-525	W/S VALVE ASM	ASSEMBLY	1
2	3-539	SPOUT ASM	ASSEMBLY	1
3	10961	SMOOTH POP - UP KNOB	PART	1
4	10288	3/16" POP UP ROD	PART	1
5	3-595C	HANDLE/ESC ASM, COLD	ASSEMBLY	1
6	3-595H	HANDLE/ESC ASM, HOT	ASSEMBLY	1
7	325	POP UP ASSEMBLY	ASSEMBLY	1

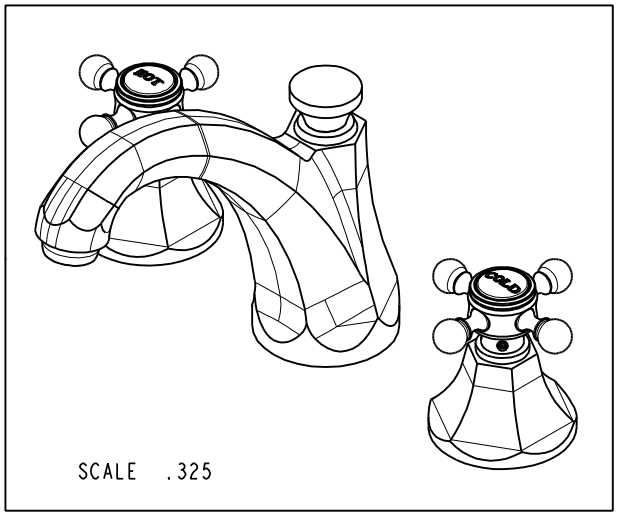

ZONE	REV	DESCRIPTION	DATE	APPROVED
-	B	EN-4300m	10/29/20	R.S.
-	A	EN-3371	08/04/17	J.M
-	-	EN-3194	12/16/16	AN

COPYRIGHT 2005 BRASSTECH, INC. THESE DRAWINGS AND THE DESIGNS DEPICTED HEREIN ARE THE PROPRIETARY PROPERTY OF BRASSTECH. ANY USE OR REPRODUCTION IS SUBJECT TO THE EXPRESS APPROVAL OF BRASSTECH. UNAUTHORIZED USE IS STRICTLY PROHIBITED. ALL RIGHTS RESERVED.

TESTING	-	-	-
ASSEMBLY	-	-	-
PLATING	-	-	-
POLISHING	-	NEXT ASSY	USED ON
MACHINING	-	APPLICATION	
TOOLING FIXTURE #		REMOVE ALL BURRS AND SHARP EDGES	

UNITS ARE: INCHES [MM]
TOLERANCES ARE:
FRACTIONS ±1/16" DECIMALS .X ±.1 [2,5] .XX ±.06 [1,5] ANGLES ±1°
(X.XXX) DENOTES CRITICAL DIMS.
ALL THREADS ARE CRITICAL

DRAWN	JINSON	10/29/20
CHECKED	R.S.	10/29/20
APPROVED	R.S.	10/29/20

BRASSTECH INCORPORATED
2001 CARNEGIE AVE.
SANTA ANA, CA 92705
(949) 417-5207

WIDESPREAD FAUCET

DWG NO. 1220C REV B

SCALE .225 REF. - SHEET 1 OF 2

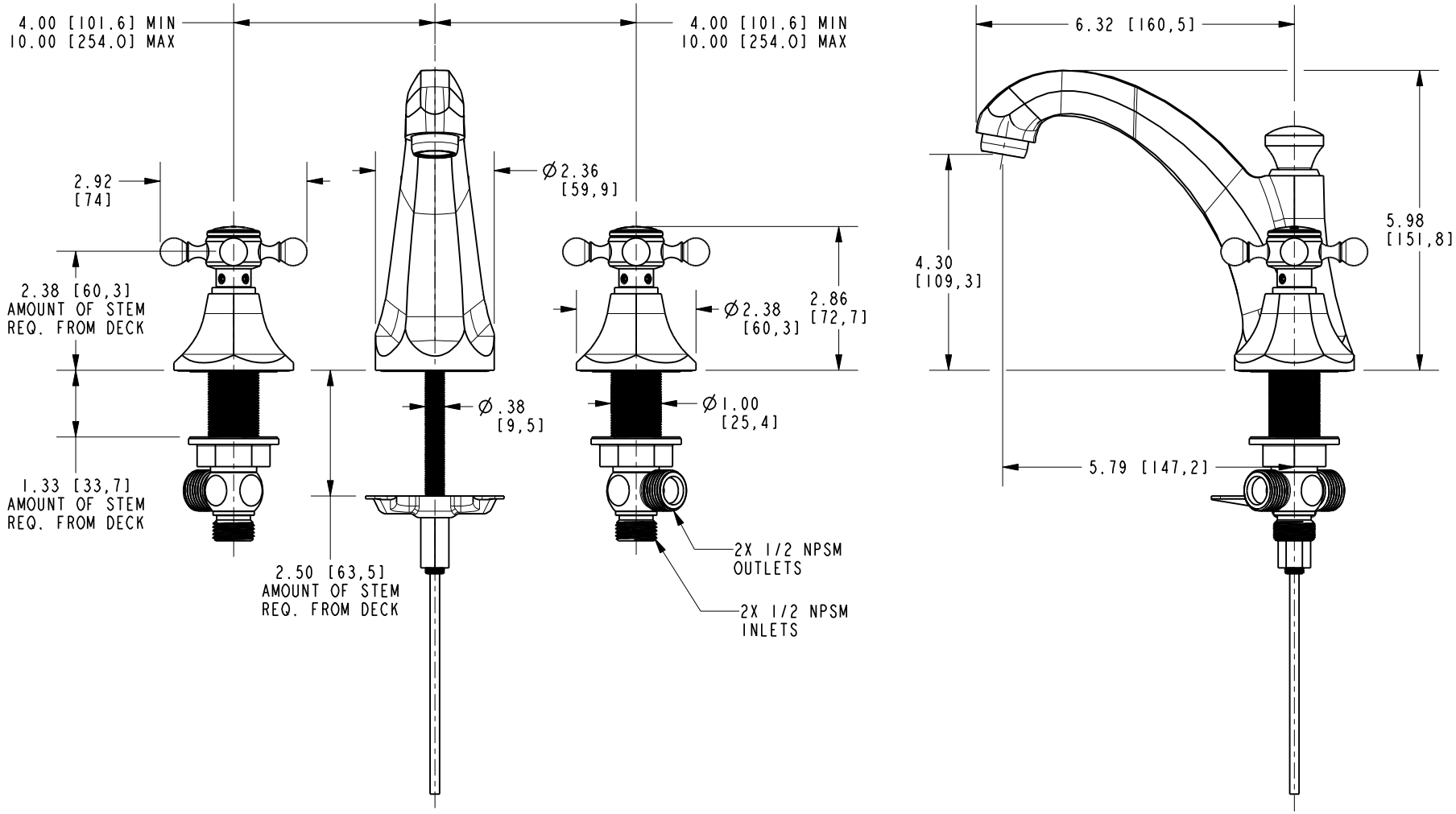

BRASSTECH INCORPORATED

2001 CARNEGIE AVE.
SANTA ANA, CA 92705
(949) 417-5207

DWG NO.	REV
1220C	B

SCALE .325	REF. -	SHEET 2 OF 2