NOTES:

1. TO INSPECT ASSEMBLY, FOLLOW FIRST ARTICLE AND IN PROCESS INSPECTION SHEET.

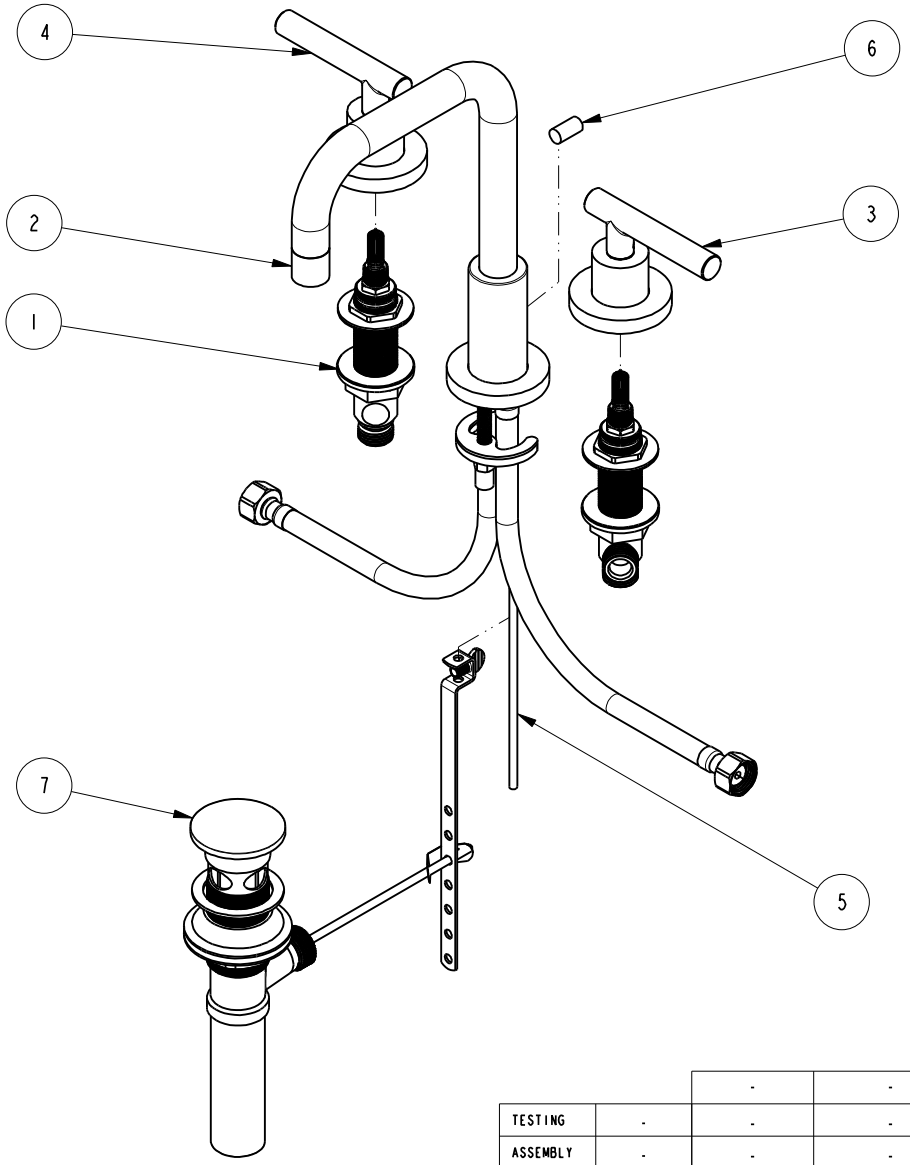

BILL OF MATERIAL (CURRENT LEVEL)

ITEM	PT/ASSY	DESCRIPTION	TYPE	QTY.
1	1-525	W/S VALVE ASM	ASSEMBLY	1
2	3-274	WIDESPREAD SPOUT ASSY	ASSEMBLY	1
3	3-227LC	HANDLE TRIM ASM - COLD	ASSEMBLY	1
4	3-227LH	HANDLE TRIM ASM - HOT	ASSEMBLY	1
5	10288	3/16" POP UP ROD	PART	1
6	10827	POP-UP KNOB	PART	1
7	325	POP UP ASSEMBLY	ASSEMBLY	1

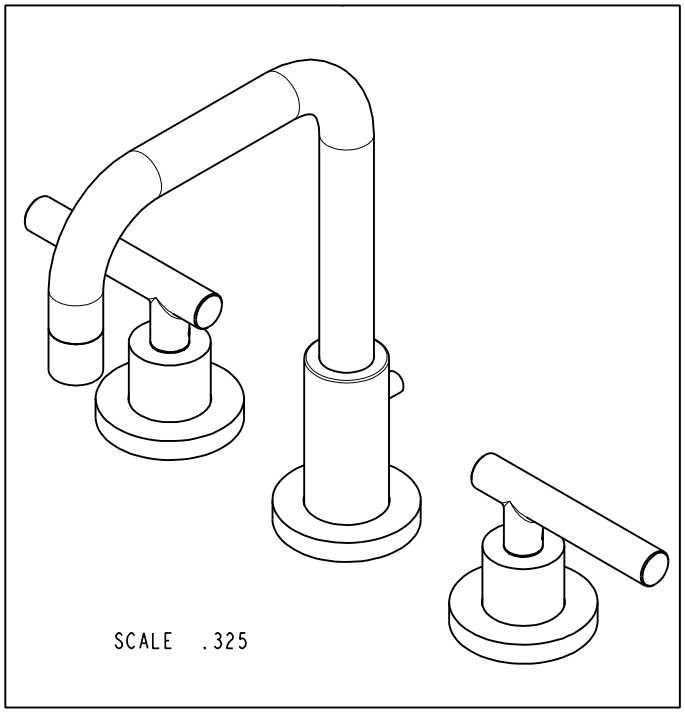

ZONE	REV	DESCRIPTION	DATE	APPROVED
-	A	EN-4300m	10/29/20	R.S.
-	-	RELEASED	04/28/03	-

COPYRIGHT 2005 BRASSTECH, INC. THESE DRAWINGS AND THE DESIGNS DEPICTED HEREIN ARE THE PROPRIETARY PROPERTY OF BRASSTECH. ANY USE OR REPRODUCTION IS SUBJECT TO THE EXPRESS APPROVAL OF BRASSTECH. UNAUTHORIZED USE IS STRICTLY PROHIBITED. ALL RIGHTS RESERVED.

		-	-
TESTING	-	-	-
ASSEMBLY	-	-	-
PLATING	-	-	***
POLISHING	-	NEXT ASSY	USED ON
MACHINING	-	APPLICATION	
TOOLING FIXTURE #		REMOVE ALL BURRS AND SHARP EDGES	

UNITS ARE: INCHES [MM]
TOLERANCES ARE:
FRACTIONS ±1/16" DECIMALS .X ±.1 [2,5] .XX ±.06 [1,5] ANGLES ±1°
(X.XXX) DENOTES CRITICAL DIMS.
ALL THREADS ARE CRITICAL

DRAWN	JINSON	10/29/20
CHECKED	R.S.	10/29/20
APPROVED	R.S.	10/29/20

BRASSTECH INCORPORATED
2001 CARNEGIE AVE.
SANTA ANA, CA 92705
(949) 417-5207

WIDESPREAD DECK FAUCET

DWG NO. 1400L REV A

SCALE .225 REF. - SHEET 1 OF 2

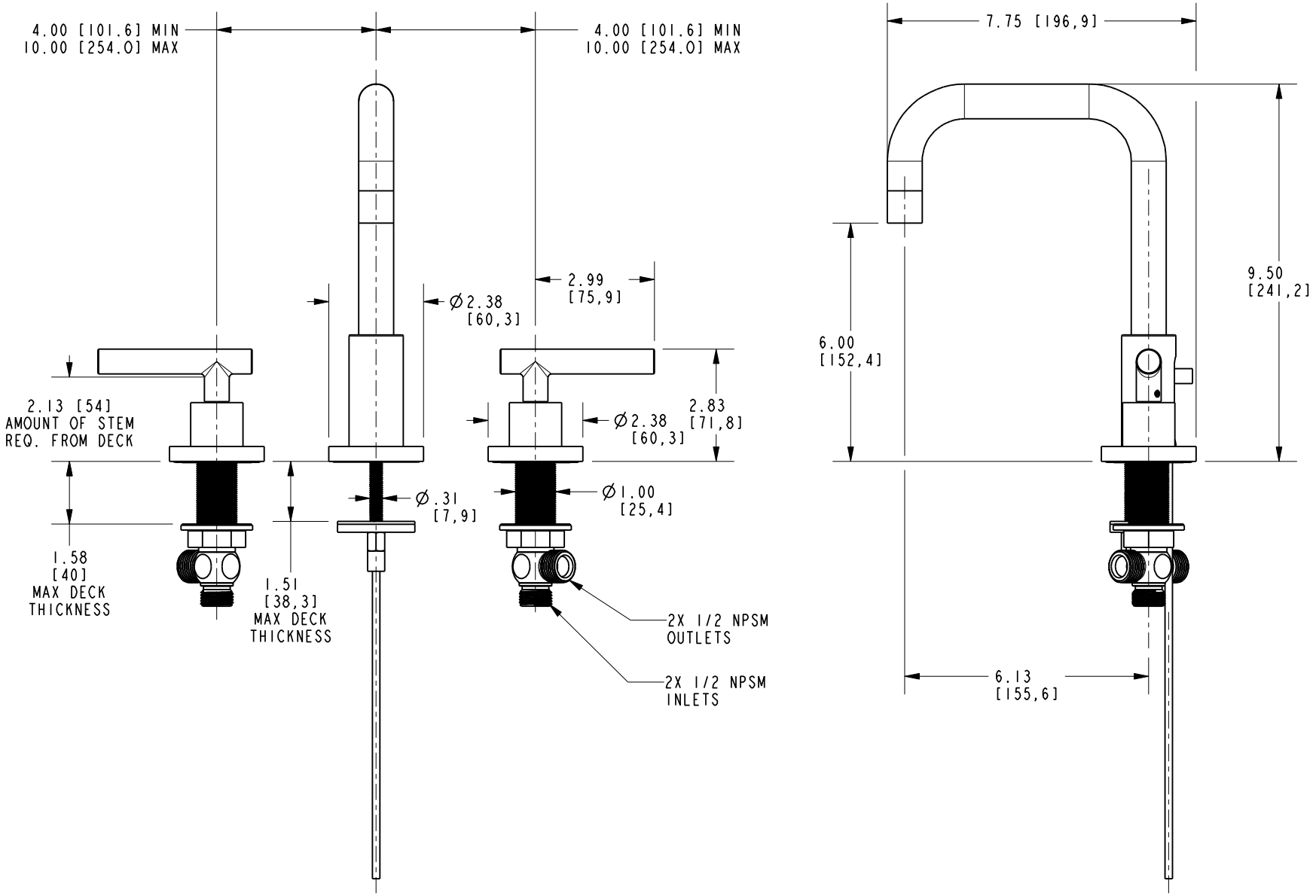

BRASSTECH INCORPORATED

2001 CARNEGIE AVE.
SANTA ANA, CA 92705
(949) 417-5207

DWG NO.	REV
1400L	A

SCALE .275	REF. -	SHEET 2 OF 2