NOTES:

1. TO INSPECT ASSEBMLY, FOLLOW FIRST ARTICLE AND IN PROCESS INSPECTION SHEET.
2. PUT THESE ITEMS IN SEPARATE PLASTIC BAGS.
3. TORQUE TO 8 +/-0.5 LB-FT.
4. APPLY THIN COAT OF SILICON GREASE FOR ALL O-RINGS BEFORE INSTALLATION.
5. APPLY LOCTITE 242, IF SCREW DOES NOT HAVE NYLON PATCH.
6. APPLY LOCTITE 680.
7. PULL OUT HOSE AND APPLY SILICON GREASE, BETWEEN HOSE AND SPOUT, 10" FROM OUTLET OF HOSE.
8. TORQUE SWIVEL NUT TO 19 +/-2 LB-IN.
9. TORQUE TO 10 +/-2 LB-FT.
10. TORQUE TO 7 +/- 2 LB-IN.
11. PARTIALLY THREAD MOUNTING KIT ONTO SHANK
12. DO NOT DOCK SPRAY HEAD TO SPOUT WHEN PACKAGING.
13. PLACE ZIP TIE 2" FROM BOTTOM OF SHANK.

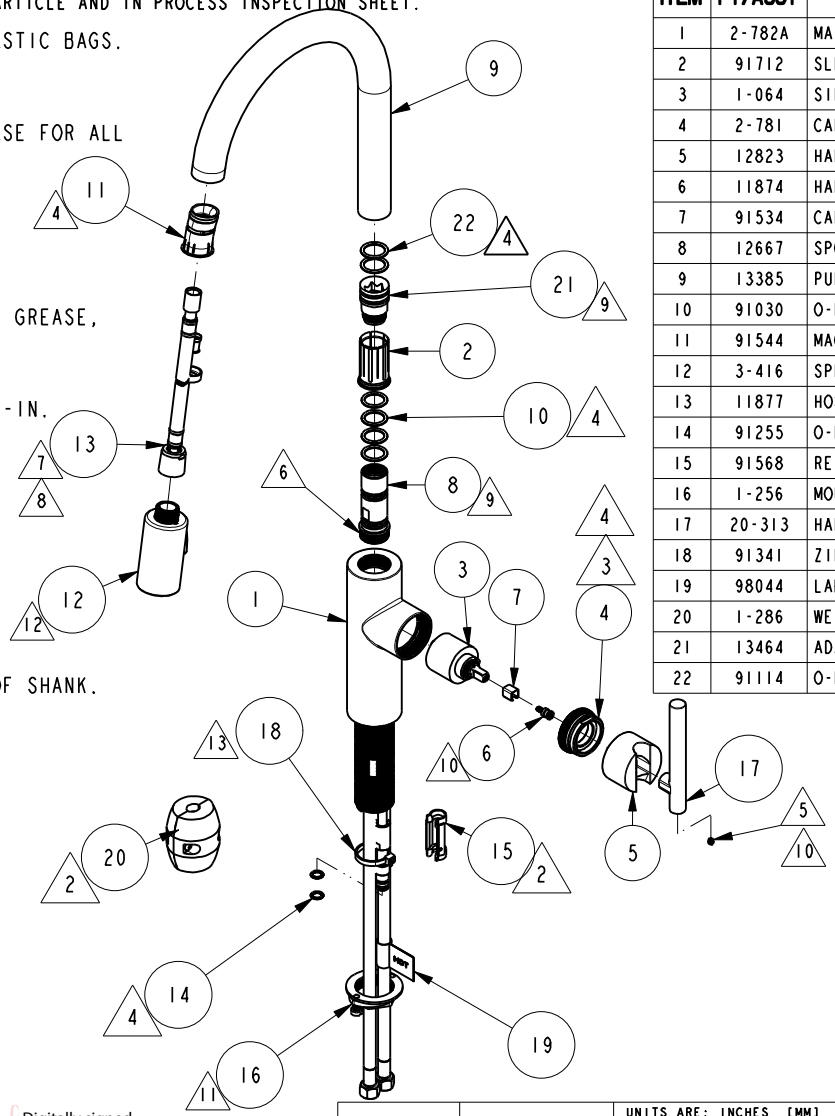

BILL OF MATERIAL (CURRENT LEVEL)

ITEM	PT/ASSY	DESCRIPTION	TYPE	QTY.
1	2-782A	MAIN BODY ASM, EAST LINEAR	ASSEMBLY	1
2	91712	SLEEVE	PART	1
3	1-064	SINGLE LEVER CARTRIDGE	PART	1
4	2-781	CART. RETAINER ASM	ASSEMBLY	1
5	12823	HANDLE HUB	PART	1
6	11874	HANDLE ADAPTER SCREW	PART	1
7	91534	CARTRIDGE STEM INSERT	PART	1
8	12667	SPOUT ADAPTER	PART	1
9	13385	PULLDOWN SPOUT - LONG	PART	1
10	91030	O-RING, #2- 115, EPDM, 65-75 DURO, NSF 61	PART	4
11	91544	MAGNET DOCKING	ASSEMBLY	1
12	3-416	SPRAY HEAD, CONTEMP	ASSEMBLY	1
13	11877	HOSE, PULLDOWN SWIVEL	ASSEMBLY	1
14	91255	O-RING, #2- 011, EPDM, 65-75 DURO,NSF-61	PART	2
15	91568	RETAINER CLIP	PART	1
16	1-256	MOUNTING KIT	ASSEMBLY	1
17	20-313	HANDLE LEVER ASM	ASSEMBLY	1
18	91341	ZIP TIE	PART	1
19	98044	LABEL - HOT	PART	1
20	1-286	WEIGHT ASM	ASSEMBLY	1
21	13464	ADAPTER EXTENSION	PART	1
22	91114	O-RING, #2- 116, EPDM, 65-75 DURO, NSF 61	PART	2

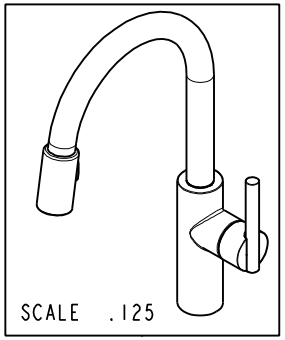

ZONE	REV	DESCRIPTION	DATE	APPROVED
-	Y	EN-4300s	03/29/21	R.S.
-	W	EN-4118b	12/17/20	J.M.
-	V	EN-4273	10/13/20	V.V.
-	U	EN-4200	07/10/20	C.G.
-	T	EN-4167	07/08/20	JMR
-	R	EN-4051	01/17/20	J.M.
-	P	EN-3931B	09/06/19	V.V.
-	N	EN-3539B	09/06/19	V.V.
-	M	EN-3413j	06/19/18	J.A.
-	L	EN-3413c	01/10/18	JM
-	K	EN-3034L	09/11/17	J.A
-	J	EN-3034	7/27/17	J.A
-	H	EN-2500	4/22/13	-

Ray Smith

Digitally signed by Ray Smith
Date: 2021.06.25 11:47:20 -04'00'

COPYRIGHT 2005 BRASSTECH, INC. THESE DRAWINGS AND THE DESIGNS DEPICTED HEREIN ARE THE PROPRIETARY PROPERTY OF BRASSTECH. ANY USE OR REPRODUCTION IS SUBJECT TO THE EXPRESS APPROVAL OF BRASSTECH. UNAUTHORIZED USE IS STRICTLY PROHIBITED. ALL RIGHTS RESERVED.

TESTING	-	-	-
ASSEMBLY	-	-	-
PLATING	-	-	-
POLISHING	-	NEXT ASSY	USED ON
MACHINING	-	APPLICATION	
TOOLING FIXTURE #		REMOVE ALL BURRS AND SHARP EDGES	

UNITS ARE: INCHES [MM]
TOLERANCES ARE:
FRACTIONS ±1/16" DECIMALS .X ±.1 [2,5] .XX ±.06 [1,5] ANGLES ±1°
(X.XXX) DENOTES CRITICAL DIMS.
ALL THREADS ARE CRITICAL

DRAWN	JINSON	03/29/21
CHECKED	R.S.	03/29/21
APPROVED	R.S.	03/29/21

BRASSTECH INCORPORATED
2001 CARNEGIE AVE.
SANTA ANA, CA 92705
(949) 417-5207

EAST LINEAR PULL DOWN - KITCHEN FAUCET

DWG NO. 1500-5103 REV Y

SCALE .150 REF. SHEET 1 OF 2

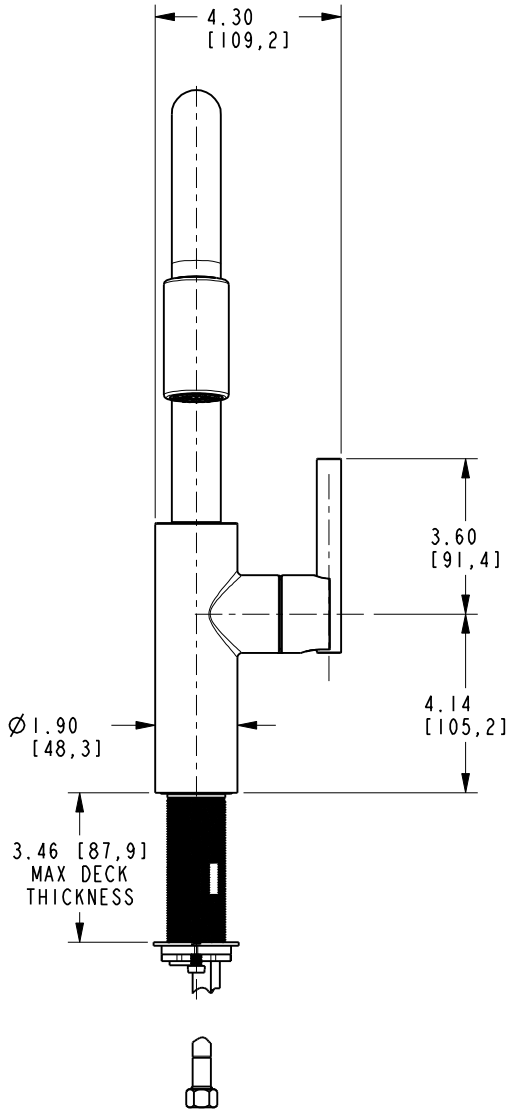

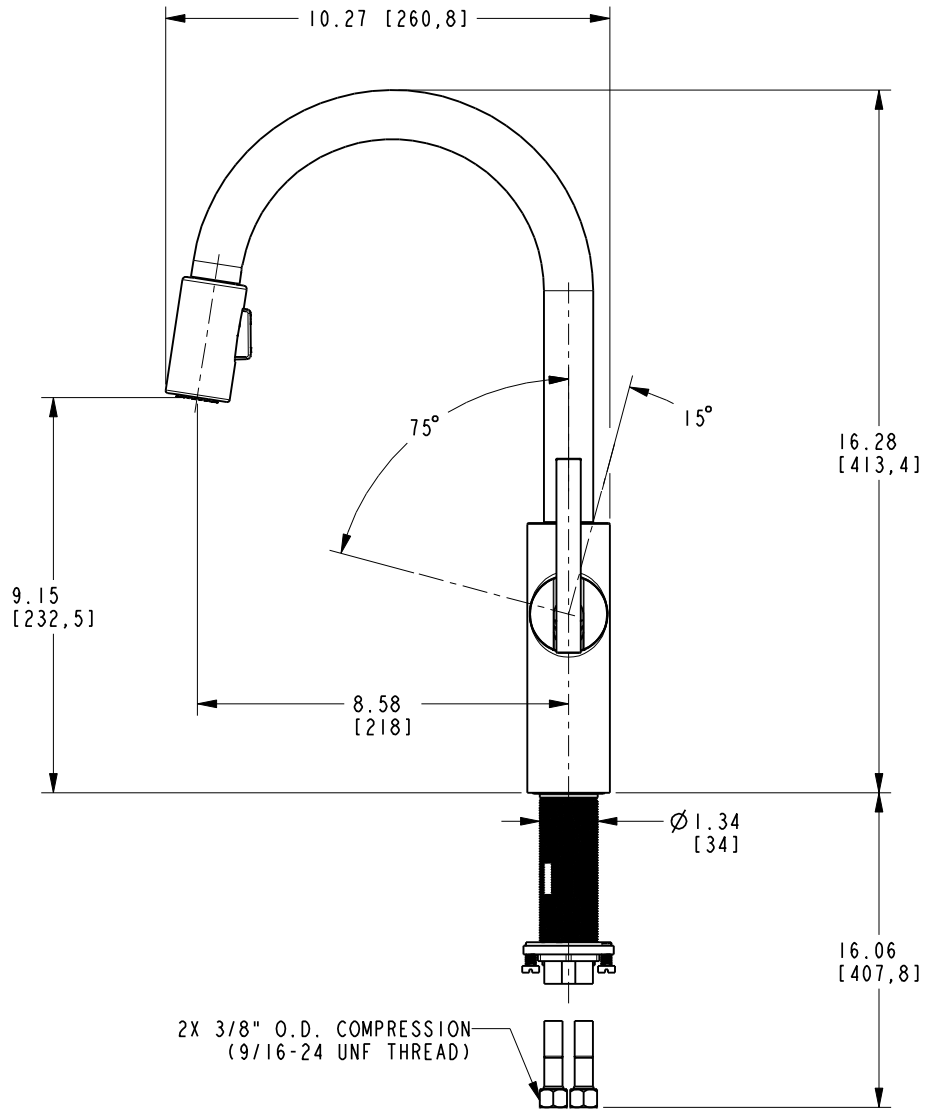

BRASSTECH INCORPORATED

2001 E. CARNEGIE AVE.
SANTA ANA, CA 92705
(949) 417-5207

DWG NO. 1500-5103		REV Y
SCALE .225	REF. -	SHEET 2 OF 2