NOTES:

(N1) 1. TO INSPECT ASSEMBLY, FOLLOW FIRST ARTICLE AND IN PROCESS INSPECTION SHEET.

BILL OF MATERIAL (CURRENT LEVEL)

ITEM	PT/ASSY	DESCRIPTION	TYPE	QTY.
1	1-676	W/S VALVE INSTALLATION	ASSEMBLY	1
2	3-434	W/S SPOUT ASSEMBLY	ASSEMBLY	1
3	3-368	HANDLE AND ESCUTCHEON ASSEMBLY	ASSEMBLY	2
4	325	POP UP ASSEMBLY	ASSEMBLY	1

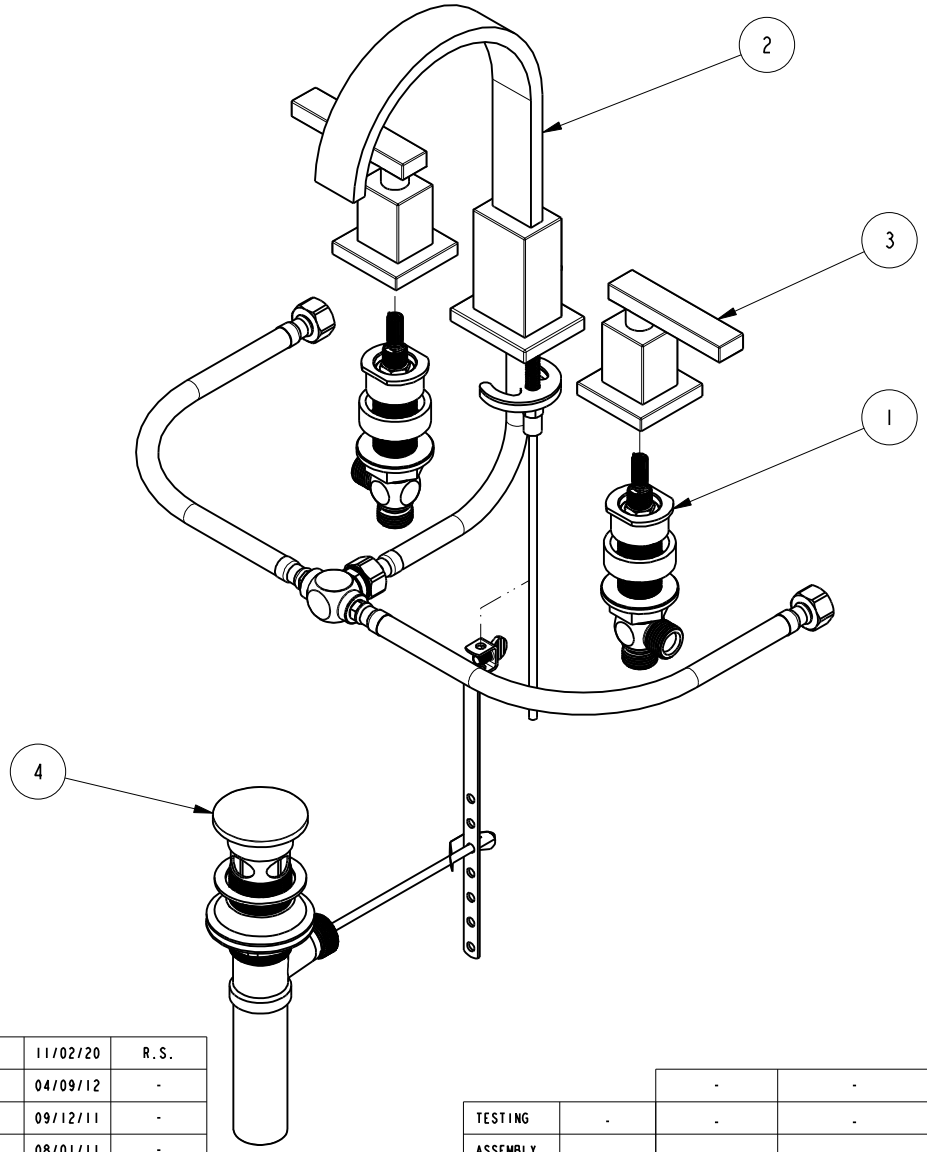

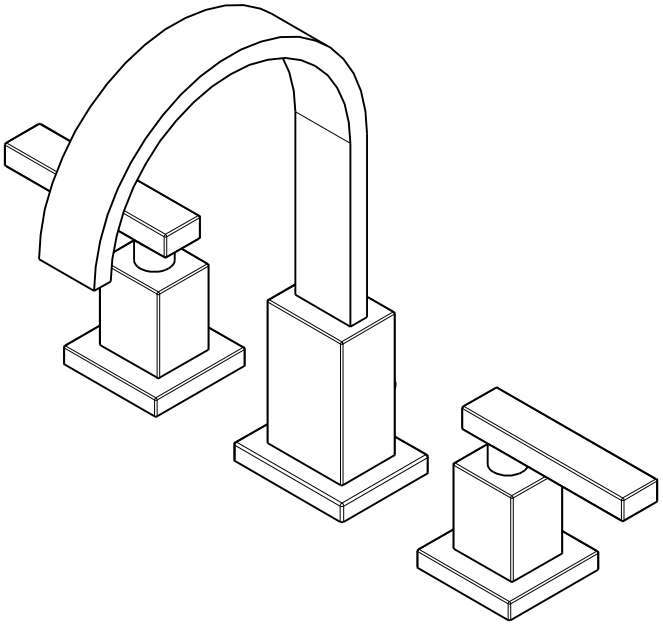

SCALE .325

ZONE	REV	DESCRIPTION	DATE	APPROVED
-	F	EN-4300m	11/02/20	R.S.
-	E	EN-2120	04/09/12	-
-	D	EN-1875	09/12/11	-
-	C	EN-1823	08/01/11	-
-	B	EN-1616	09/13/10	-
-	A	EN-1265B	11/25/09	-
-	-	EN-1265	10/30/09	-

COPYRIGHT 2005 BRASSTECH, INC. THESE DRAWINGS AND THE DESIGNS DEPICTED HEREIN ARE THE PROPRIETARY PROPERTY OF BRASSTECH. ANY USE OR REPRODUCTION IS SUBJECT TO THE EXPRESS APPROVAL OF BRASSTECH. UNAUTHORIZED USE IS STRICTLY PROHIBITED. ALL RIGHTS RESERVED.

TESTING	-	-	-
ASSEMBLY	-	-	-
PLATING	-	-	-
POLISHING	-	NEXT ASSY	USED ON
MACHINING	-	APPLICATION	
TOOLING FIXTURE #		REMOVE ALL BURRS AND SHARP EDGES	

UNITS ARE: INCHES [MM]
TOLERANCES ARE:
FRACTIONS ±1/16" DECIMALS .X ±.1 [2,5] .XX ±.06 [1,5] ANGLES ±1°
(X.XXX) DENOTES CRITICAL DIMS.
ALL THREADS ARE CRITICAL

DRAWN	JINSON	11/02/20
CHECKED	R.S.	11/02/20
APPROVED	R.S.	11/02/20

BRASSTECH INCORPORATED
2001 CARNEGIE AVE.
SANTA ANA, CA 92705
(949) 417-5207

W/S FAUCET

DWG NO. 2040 REV F

SCALE .225 REF. - SHEET 1 OF 2

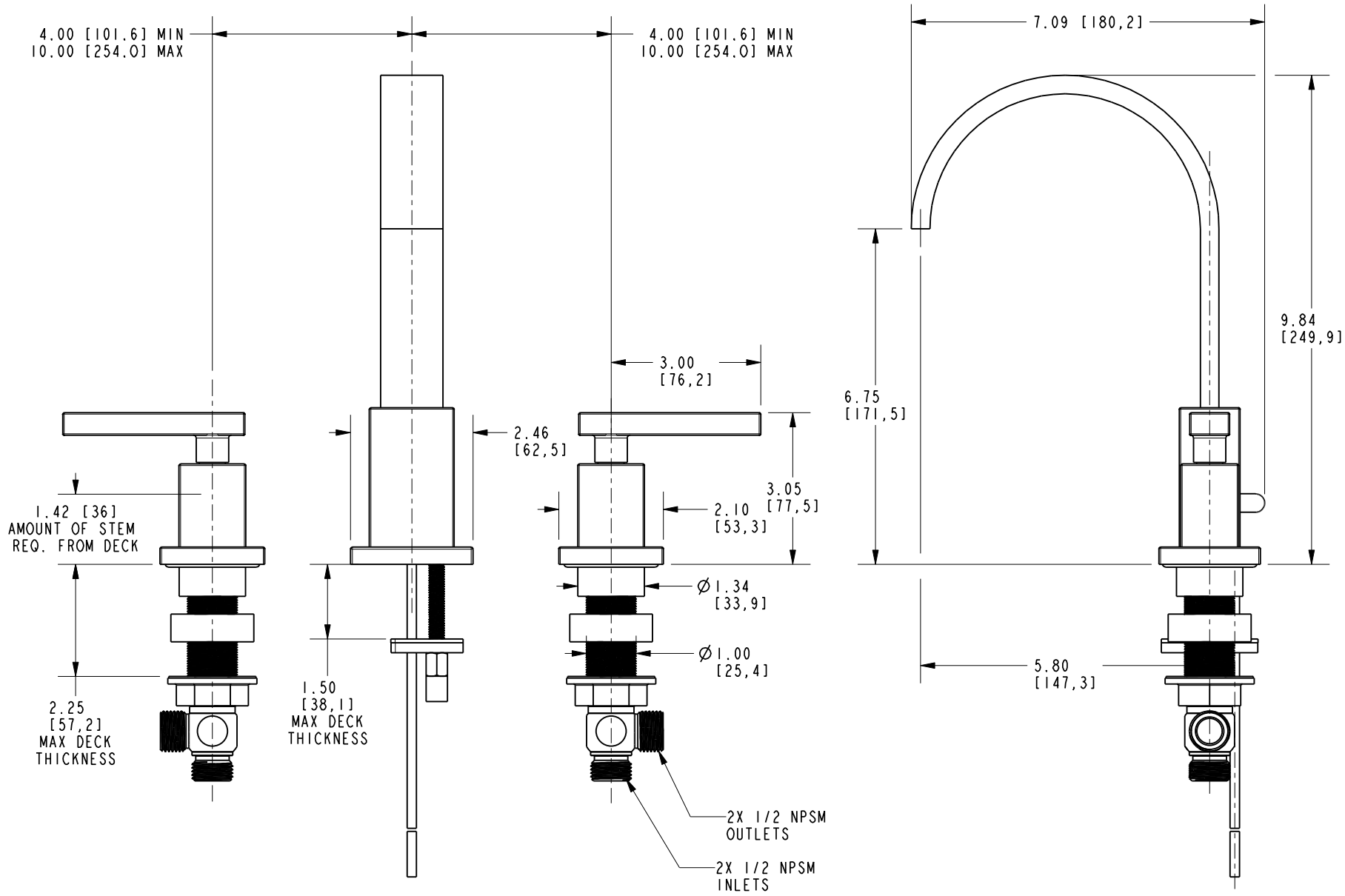

BRASSTECH INCORPORATED

2001 CARNEGIE AVE.
SANTA ANA, CA 92705
(949) 417-5207

DWG NO.	REV
2040	F

SCALE	REF.	SHEET
.350	-	2 OF 2