NOTES:

1. TO INSPECT ASSEMBLY, FOLLOW FIRST ARTICLE AND IN PROCESS INSPECTION SHEET.

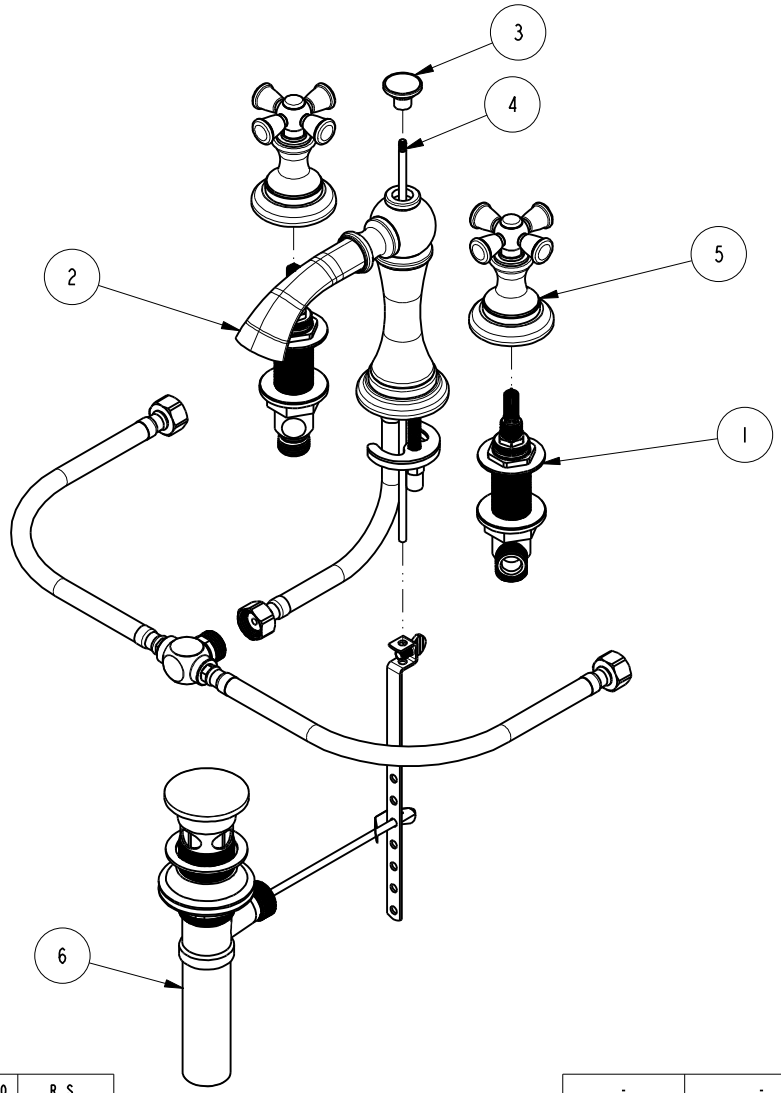

BILL OF MATERIAL (CURRENT LEVEL)

ITEM	PT/ASSY	DESCRIPTION	TYPE	QTY.
1	1-525	W/S VALVE ASM	ASSEMBLY	1
2	2-769	SPOUT ASSEMBLY, WIDE SPREAD	ASSEMBLY	1
3	11583	POP-UP KNOB	PART	1
4	10288	3/16" POP UP ROD	PART	1
5	3-378	CROSS HANDLE ASM	ASSEMBLY	2
6	325	POP UP ASSEMBLY	ASSEMBLY	1

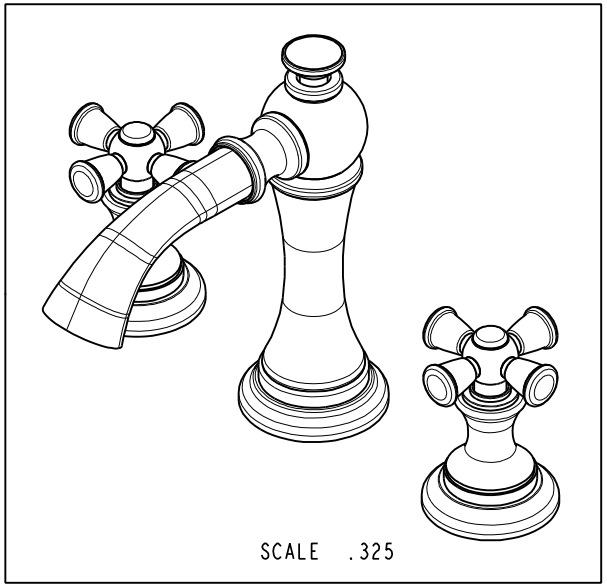

ZONE	REV	DESCRIPTION	DATE	APPROVED
-	E	EN-4300m	11/03/20	R.S.
-	D	EN-3764	12/07/18	J.M.
-	C	EN-2120	04/05/12	-
-	B	EN-1844	09/01/11	-
-	A	EN-1616	09/13/10	-
-	-	EN-1266	05/05/10	-

COPYRIGHT 2005 BRASSTECH, INC. THESE DRAWINGS AND THE DESIGNS DEPICTED HEREIN ARE THE PROPRIETARY PROPERTY OF BRASSTECH. ANY USE OR REPRODUCTION IS SUBJECT TO THE EXPRESS APPROVAL OF BRASSTECH. UNAUTHORIZED USE IS STRICTLY PROHIBITED. ALL RIGHTS RESERVED.

TESTING	-	-	-
ASSEMBLY	-	-	-
PLATING	-	-	-
POLISHING	-	NEXT ASSY	USED ON
MACHINING	-	APPLICATION	
TOOLING FIXTURE #		REMOVE ALL BURRS AND SHARP EDGES	

UNITS ARE: INCHES [MM]
TOLERANCES ARE:
FRACTIONS ±1/16" DECIMALS .X ±.1 [2,5] .XX ±.06 [1,5] ANGLES ±1°
(X.XXX) DENOTES CRITICAL DIMS.
ALL THREADS ARE CRITICAL

DRAWN	JINSON	11/03/20
CHECKED	R.S.	11/03/20
APPROVED	R.S.	11/03/20

BRASSTECH INCORPORATED
2001 CARNEGIE AVE.
SANTA ANA, CA 92705
(949) 417-5207

W/S LAVATORY FAUCET

DWG NO. 2440 REV E

SCALE .200 REF. - SHEET 1 OF 2

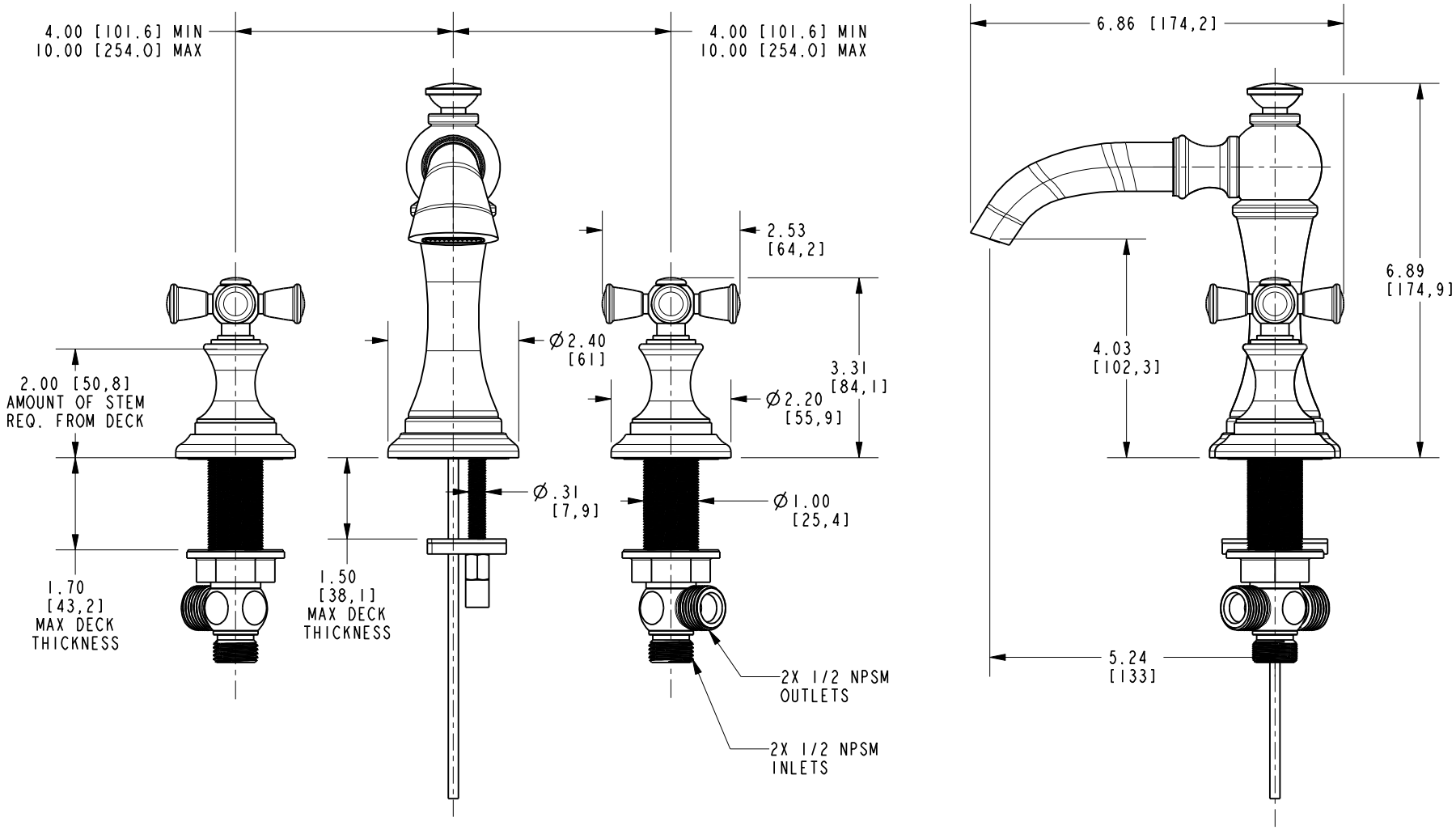

BRASSTECH INCORPORATED

2001 CARNEGIE AVE.
SANTA ANA, CA 92705
(949) 417-5207

DWG NO.	REV
2440	E

SCALE .350	REF. -	SHEET 2 OF 2