NOTES:

(N1) 1. FIT / FORM / FUNCTION SHALL FOLLOW PS-E.008.

2. TORQUE TO 7.5-8.5 LB-FT.

3. APPLY THIN COAT OF SILICON GREASE FOR ALL O-RINGS BEFORE INSTALLATUON.

4. APPLY LOCTITE 242, IF SCREW DOES NOT HAVE NYLON PATCH.

5. PUT THESE ITEMS IN SEPARATE PLASTIC BAGS.

6. APPLY SILICONE GREASE 10" FROM OUTLET OF PN 11877.

J.R. 01/21/2020

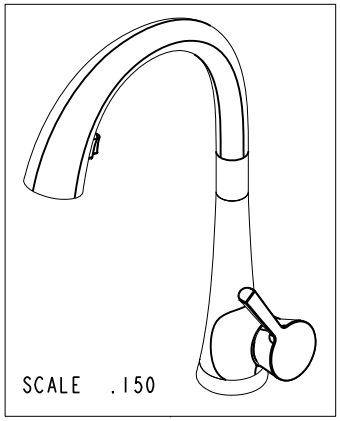

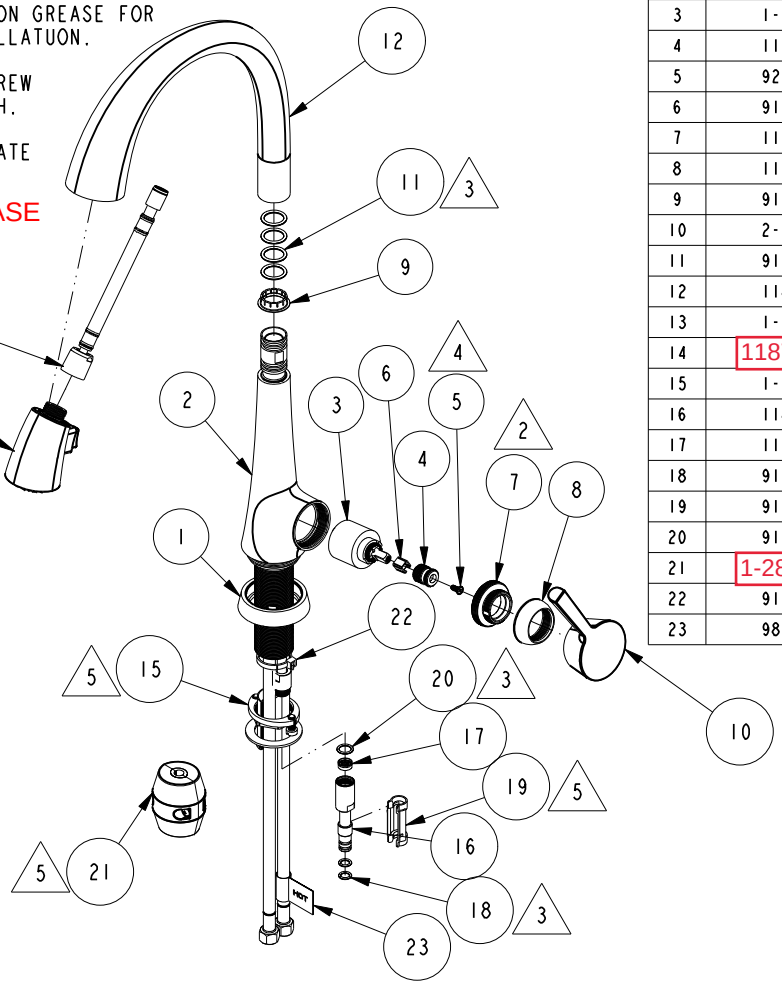

BILL OF MATERIAL (CURRENT LEVEL)

ITEM	PT/ASSY	DESCRIPTION	TYPE	QTY.
1	2-784	BASE RING ASM	ASSEMBLY	1
2	2-791	MAIN BODY ASM , VESSA	ASSEMBLY	1
3	1-064	SINGLE LEVER CARTRIDGE	PART	1
4	11713	CARTRIDGE STEM ADAPTER	PART	1
5	92035	SCRW, M4 X .7 X 10 PHL FLT HD SS	PART	1
6	91534	CARTRIDGE STEM INSERT	PART	1
7	11714	CARTRIDGE RETAINER	PART	1
8	11715	CARTRIDGE CAP	PART	1
9	91540	SWIVEL SLEEVE, BOTTOM	PART	1
10	2-790	HANDLE ASM	ASSEMBLY	1
11	91030	O-RING, #2- 115, EPDM, 65-75 DURO, NSF 61	PART	4
12	11819	SPOUT, VESSA	PART	1
13	1-245	SPRAY HEAD, VESPERA	ASSEMBLY	1
14	11877	HOSE, PULLDOWN, GREY	ASSEMBLY	1
15	1-256	MOUNTING KIT	ASSEMBLY	1
16	11876	OUTLET ADAPTER, LOWER	PART	1
17	11956	FLOW REGULATOR, 1.8 GPM, LIGHT BLUE	PART	1
18	91255	O-RING, #2- 011, EPDM, 65-75 DURO,NSF-61	PART	2
19	91568	RETAINER CLIP	PART	1
20	91018	O-RING, #2- 013, EPDM, 65-75 DURO,NSF-61	PART	1
21	1-286	WEIGHT	ASSEMBLY	1
22	91341	ZIP TIE	PART	1
23	98044	LABEL - HOT	PART	1

Juan Romo

Digitally signed by Juan Romo
Date: 2019.10.10 15:35:22 -07'00'

ZONE	REV	DESCRIPTION	DATE	APPROVED
-	F	EN-3931B	09/09/19	V.V.
-	E	EN-2737	04/04/14	-
-	D	EN-2500	04/22/13	-
-	C	EN-2211	07/06/12	-
-	B	EN-2181	06/11/12	-
-	A	EN-1552-4A	09/08/11	-
-	-	EN-1552-4	08/03/11	-

COPYRIGHT 2005 BRASSTECH, INC. THESE DRAWINGS AND THE DESIGNS DEPICTED HEREIN ARE THE PROPRIETARY PROPERTY OF BRASSTECH. ANY USE OR REPRODUCTION IS SUBJECT TO THE EXPRESS APPROVAL OF BRASSTECH. UNAUTHORIZED USE IS STRICTLY PROHIBITED. ALL RIGHTS RESERVED.

TESTING	-	-	-
ASSEMBLY	-	-	-
PLATING	-	-	-
POLISHING	-	NEXT ASSY	USED ON
MACHINING	-	APPLICATION	
TOOLING FIXTURE #		REMOVE ALL BURRS AND SHARP EDGES	

UNITS ARE: INCHES [MM]
TOLERANCES ARE:
FRACTIONS ±1/16" DECIMALS .X ±.1 [2,5] .XX ±.06 [1,5] ANGLES ±1°
(X.XXX) DENOTES CRITICAL DIMS.
ALL THREADS ARE CRITICAL

DRAWN	JINSON	09/09/19
CHECKED	J.M.	09/09/19
APPROVED	J.M.	09/09/19

BRASSTECH INCORPORATED
2001 CARNEGIE AVE.
SANTA ANA, CA 92705
(949) 417-5207

VESPERA PULL DOWN - KITCHEN FAUCET

DWG NO. 2500-5103 REV F

SCALE .150 REF. - SHEET 1 OF 2

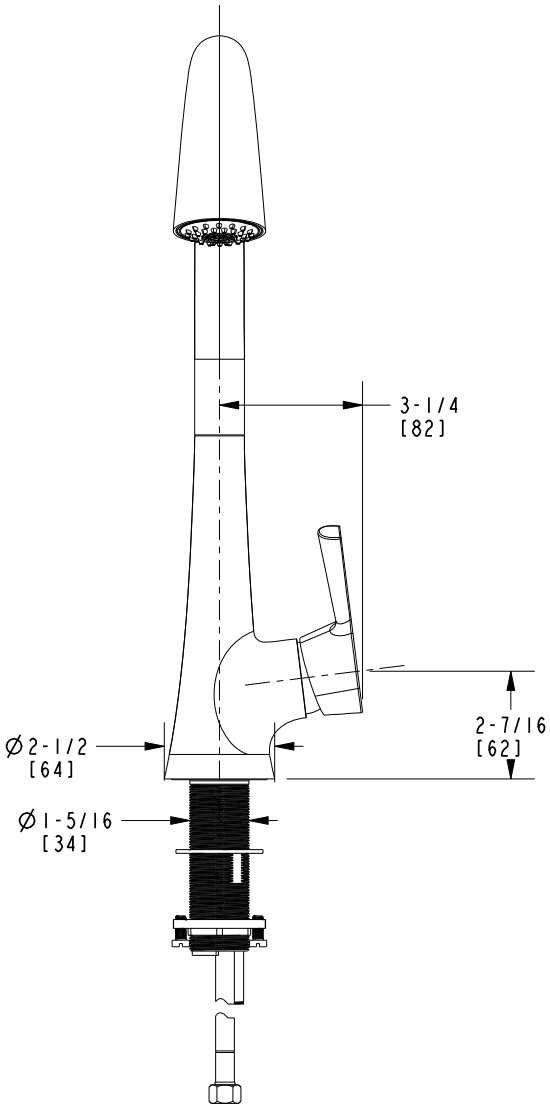

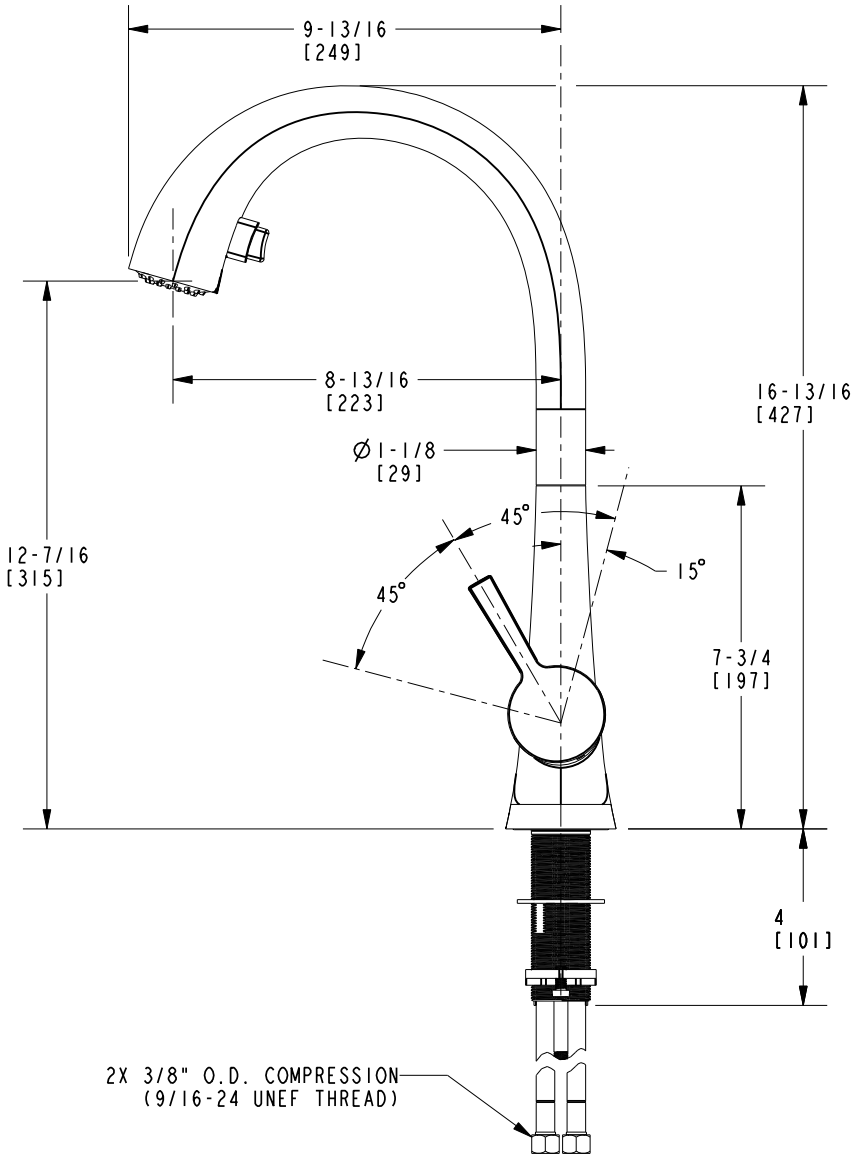

BRASSTECH INCORPORATED

2001 E. CARNEGIE AVE.
SANTA ANA, CA 92705
(949) 417-5207

DWG NO.	REV
2500-5103	F

SCALE	REF.	SHEET
.230	-	2 OF 2