NOTES:

1. TO INSPECT ASSEMBLY, FOLLOW FIRST ARTICLE AND IN PROCESS INSPECTION SHEET.

BILL OF MATERIAL (CURRENT LEVEL)

ITEM	PT/ASSY	DESCRIPTION	TYPE	QTY.
1	3-214	SQUARE R/T SPOUT	ASSEMBLY	1
2	3-220C	ASSY, HANDLE TRIM, COLD	ASSEMBLY	1
3	3-220H	ASSY, HANDLE TRIM, HOT	ASSEMBLY	1
4	1-502	ROMAN TUB 2 - VALVE ROUGH	ASSEMBLY	1

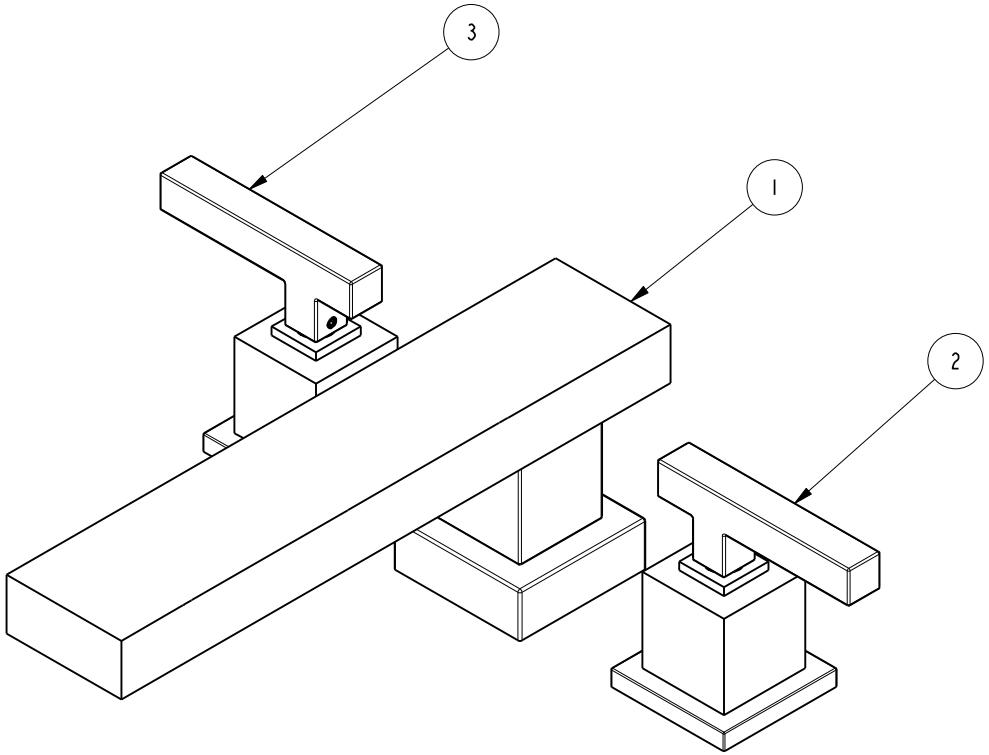

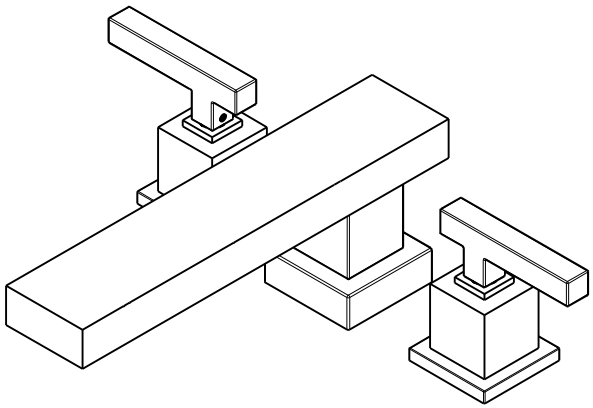

SCALE .250

Ray Smith

Digitally signed by Ray Smith
Date: 2021.04.30 09:09:55 -04'00'

ZONE	REV	DESCRIPTION	DATE	APPROVED
-	D	EN-4300u	02/02/21	R.S.
-	C	EN-2032	01/07/14	-
-	-	RELEASED	09/27/99	-

COPYRIGHT 2005 BRASSTECH, INC. THESE DRAWINGS AND THE DESIGNS DEPICTED HEREIN ARE THE PROPRIETARY PROPERTY OF BRASSTECH. ANY USE OR REPRODUCTION IS SUBJECT TO THE EXPRESS APPROVAL OF BRASSTECH. UNAUTHORIZED USE IS STRICTLY PROHIBITED. ALL RIGHTS RESERVED.

TESTING	-	-	-
ASSEMBLY	-	-	-
PLATING	-	-	-
POLISHING	-	NEXT ASSY	USED ON
MACHINING	-	APPLICATION	
TOOLING FIXTURE #		REMOVE ALL BURRS AND SHARP EDGES	

UNITS ARE: INCHES [MM]
TOLERANCES ARE:
FRACTIONS ±1/16" DECIMALS .X ±.1 [2,5] .XX ±.06 [1,5] ANGLES ±1°
(X.XXX) DENOTES CRITICAL DIMS.
ALL THREADS ARE CRITICAL

DRAWN	JINSON	02/02/21
CHECKED	R.S.	02/02/21
APPROVED	R.S.	02/02/21

BRASSTECH INCORPORATED
2001 CARNEGIE AVE.
SANTA ANA, CA 92705
(949) 417-5207

R /T TRIM KIT - 3-2026

DWG NO. 3-2026 REV D

SCALE .375 REF. - SHEET 1 OF 3

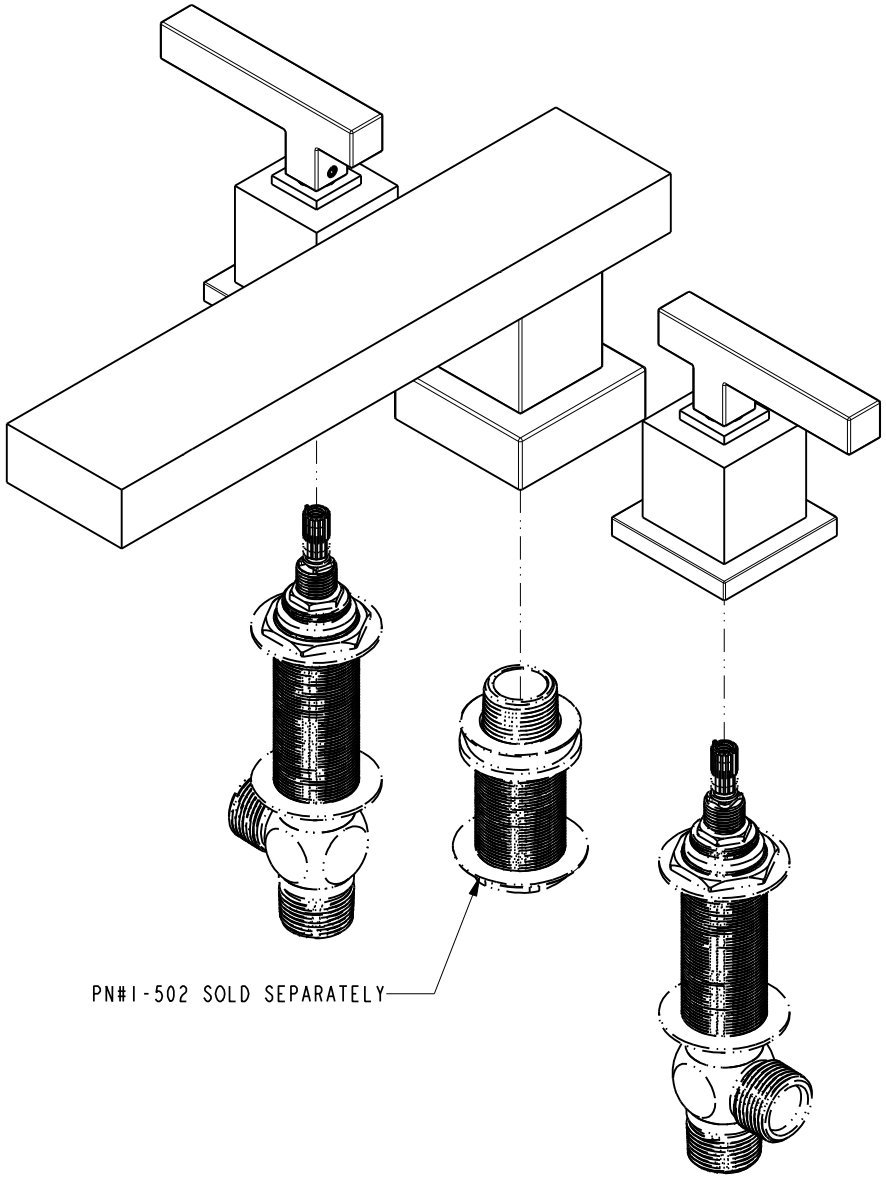

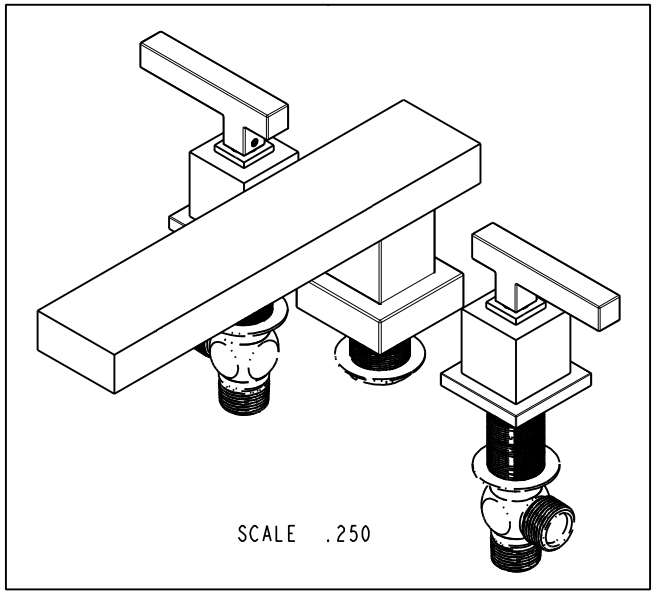

BRASSTECH INCORPORATED
2001 CARNEGIE AVE.
SANTA ANA, CA 92705
(949) 417-5207

DWG NO.	REV
3-2026	D

SCALE .375	REF. -	SHEET 2 OF 3

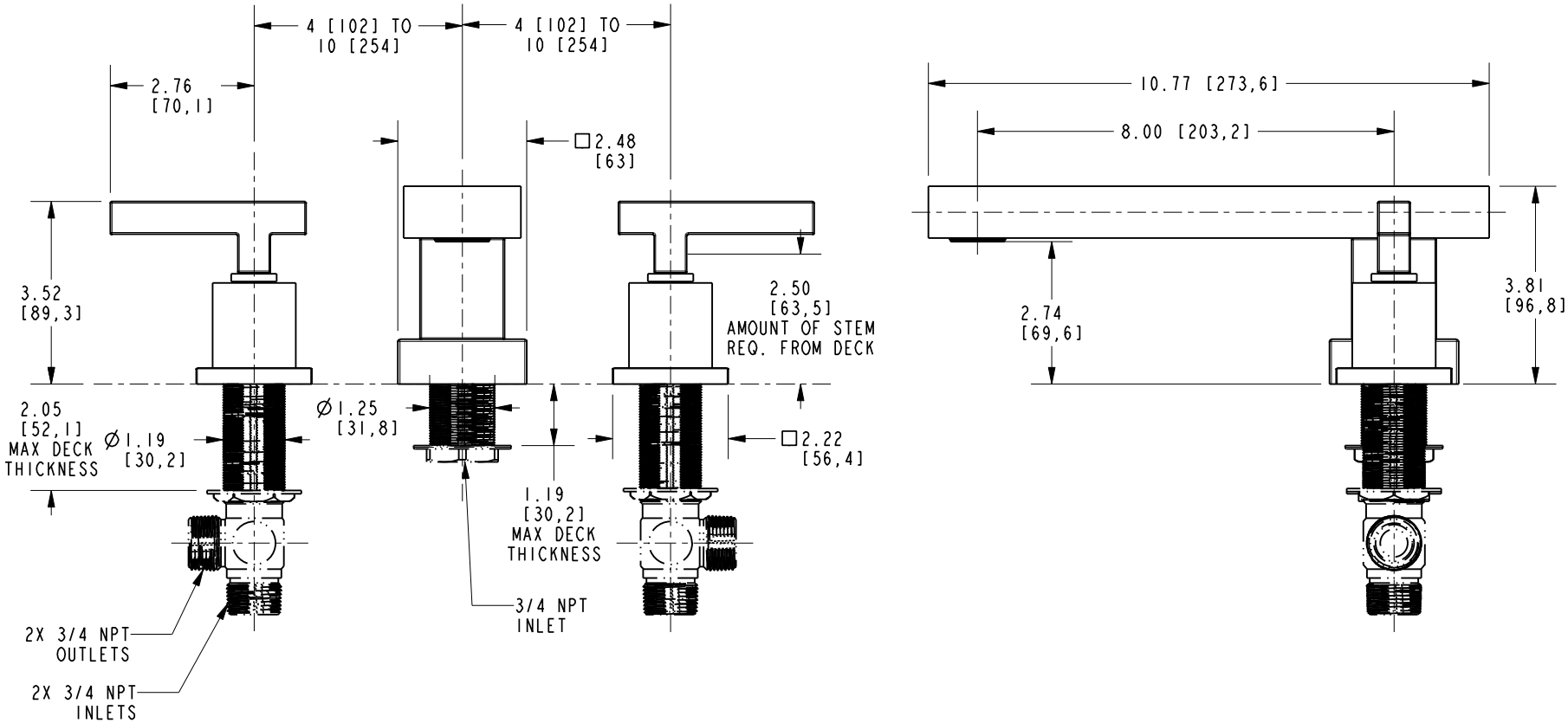

BRASSTECH INCORPORATED

2001 CARNEGIE AVE.
SANTA ANA, CA 92705
(949) 417-5207

DWG NO.	REV
3-2026	D

SCALE .313	REF. -	SHEET 3 OF 3