NOTES:

1. TO INSPECT ASSEMBLY, FOLLOW FIRST ARTICLE AND IN PROCESS INSPECTION SHEET.

BILL OF MATERIAL (CURRENT LEVEL)

ITEM	PT/ASSY	DESCRIPTION	TYPE	QTY.
1	3-563	R/T SPOUT ASM	ASSEMBLY	1
2	3-604	LEVER HANDLE ASM - COLD	ASSEMBLY	1
3	3-605	LEVER HANDLE ASM - HOT	ASSEMBLY	1

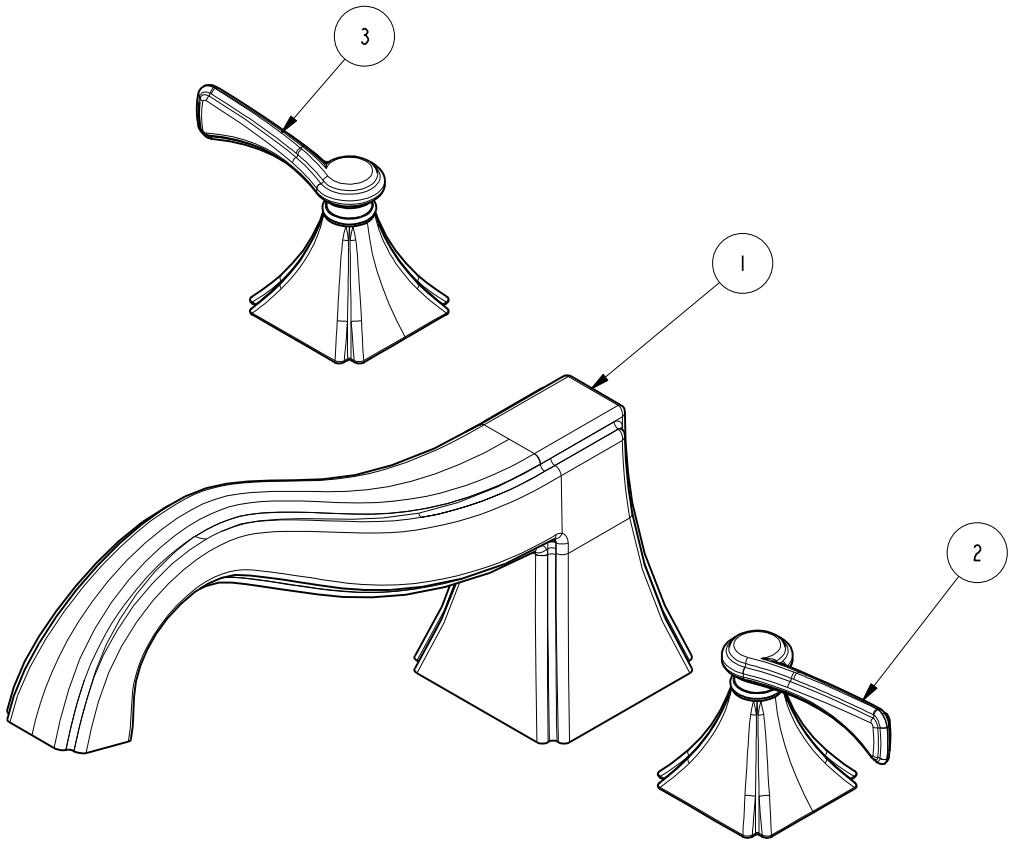

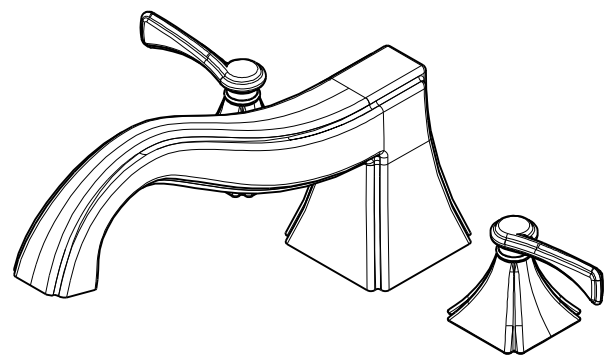

SCALE .250

Ray Smith

Digitally signed by Ray Smith
Date: 2021.04.30 11:45:27 -04'00'

ZONE	REV	DESCRIPTION	DATE	APPROVED
-	B	EN-4300u	02/02/21	R.S.
-	A	EN-3435	01/23/18	J.A.
-	-	EN-2772a	02/05/15	J.M

COPYRIGHT 2005 BRASSTECH, INC. THESE DRAWINGS AND THE DESIGNS DEPICTED HEREIN ARE THE PROPRIETARY PROPERTY OF BRASSTECH. ANY USE OR REPRODUCTION IS SUBJECT TO THE EXPRESS APPROVAL OF BRASSTECH. UNAUTHORIZED USE IS STRICTLY PROHIBITED. ALL RIGHTS RESERVED.

TESTING	-	-	-
ASSEMBLY	-	-	-
PLATING	-	-	-
POLISHING	-	NEXT ASSY	USED ON
MACHINING	-	APPLICATION	
TOOLING FIXTURE #		REMOVE ALL BURRS AND SHARP EDGES	

UNITS ARE: INCHES [MM]
TOLERANCES ARE:
FRACTIONS ±1/16" DECIMALS .X ±.1 [2,5] .XX ±.06 [1,5] ANGLES ±1°
(X.XXX) DENOTES CRITICAL DIMS.
ALL THREADS ARE CRITICAL

DRAWN	JINSON	02/02/21
CHECKED	R.S.	02/02/21
APPROVED	R.S.	02/02/21

BRASSTECH INCORPORATED
2001 CARNEGIE AVE.
SANTA ANA, CA 92705
(949) 417-5207

R/T WITH LEVER HANDLES

DWG NO. 3-2536 REV B

SCALE .375 REF. - SHEET 1 OF 3

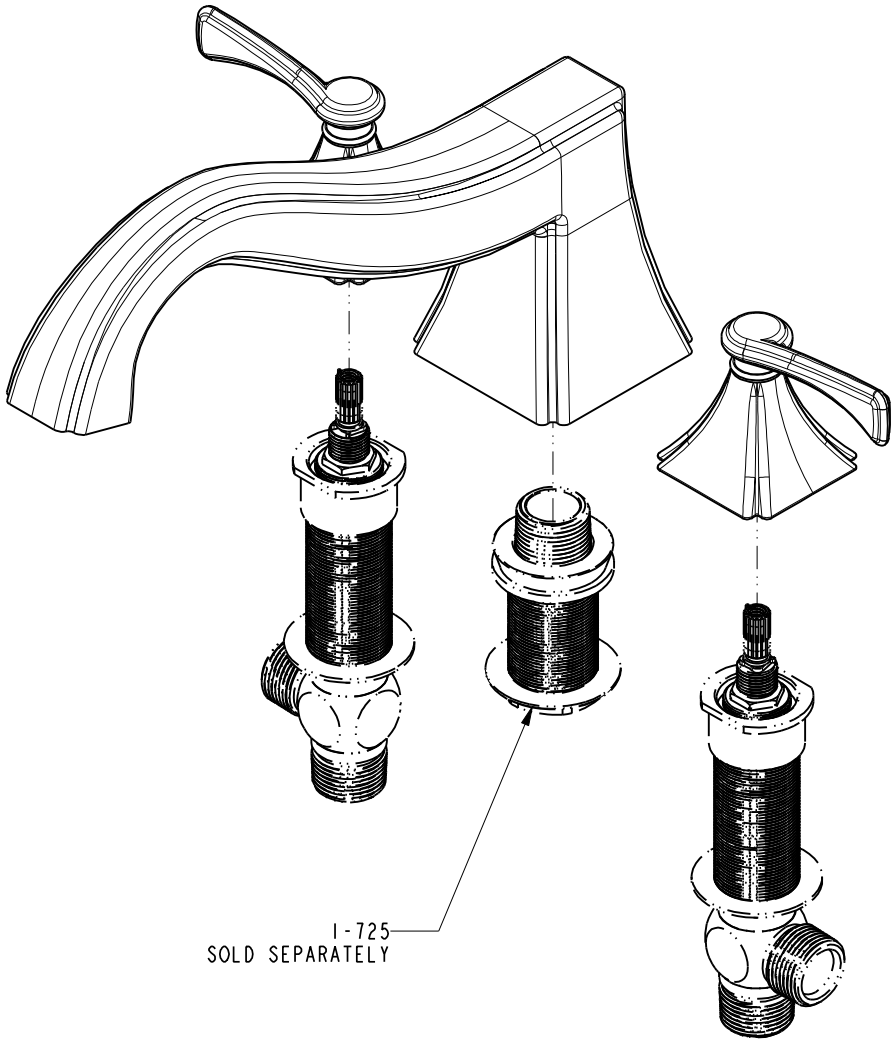

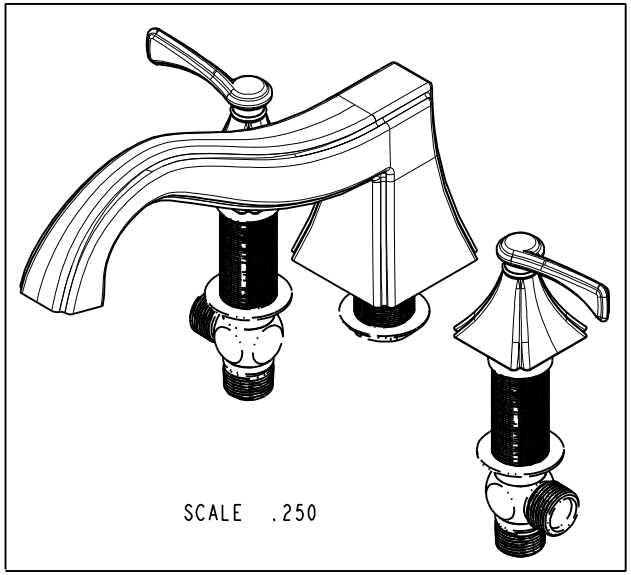

BRASSTECH INCORPORATED
2001 CARNEGIE AVE.
SANTA ANA, CA 92705
(949) 417-5207

DWG NO.		REV
3-2536		B
SCALE .375	REF. -	SHEET 2 OF 3

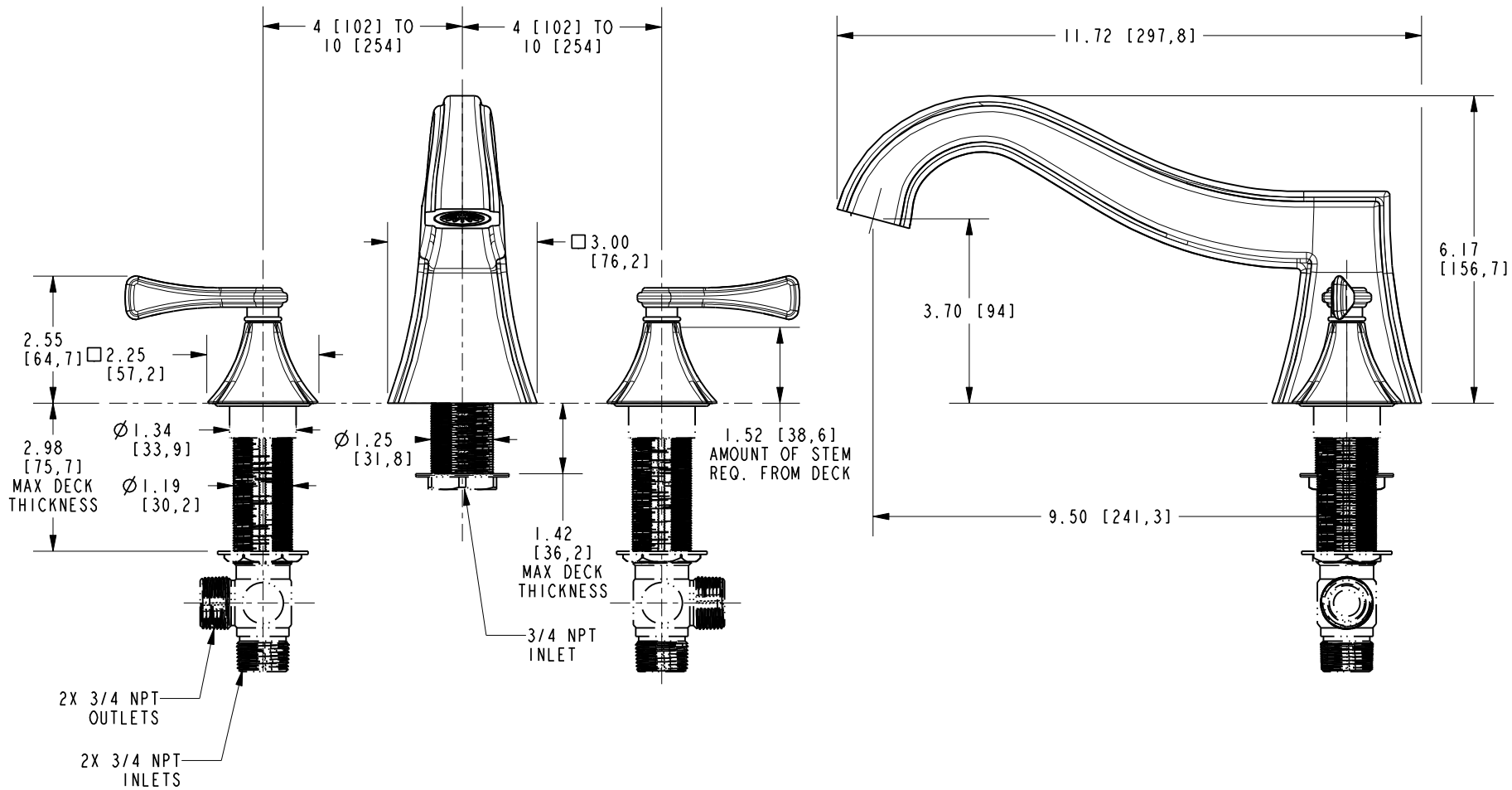

BRASSTECH INCORPORATED
2001 CARNEGIE AVE.
SANTA ANA, CA 92705
(949) 417-5207

DWG NO.	REV
3-2536	B

SCALE .313	REF. -	SHEET 3 OF 3