NOTES:

1. TO INSPECT ASSEMBLY, FOLLOW FIRST ARTICLE AND IN PROCESS INSPECTION SHEET.

BILL OF MATERIAL (CURRENT LEVEL)

ITEM	PT/ASSY	DESCRIPTION	TYPE	QTY.
1	3-227	HANDLE TRIM - STOP VALVE	ASSEMBLY	2
2	3-234	WALL TUB SPOUT ASM	ASSEMBLY	1

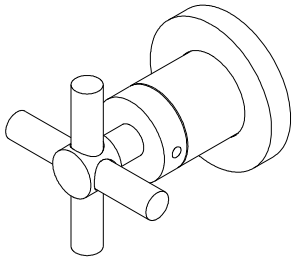

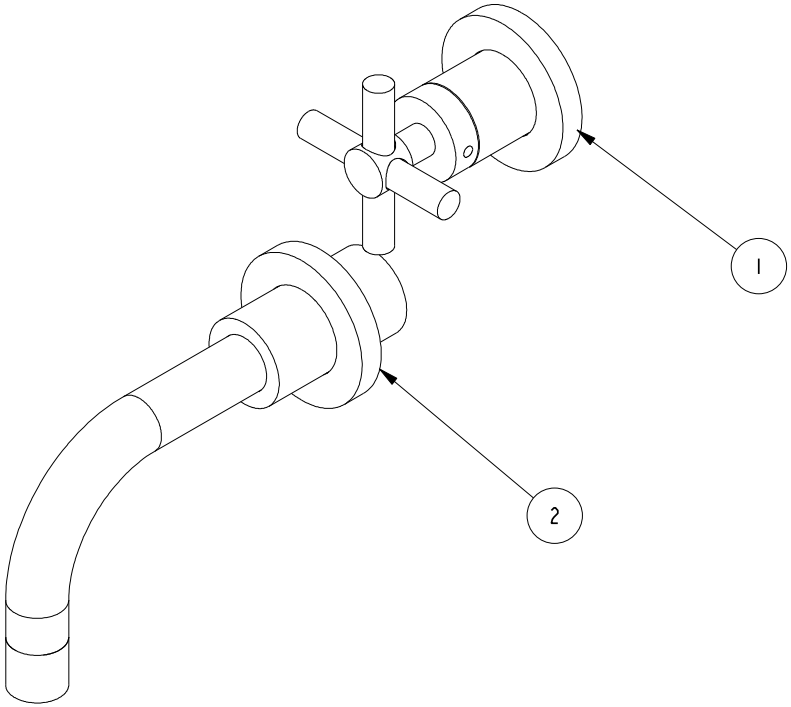

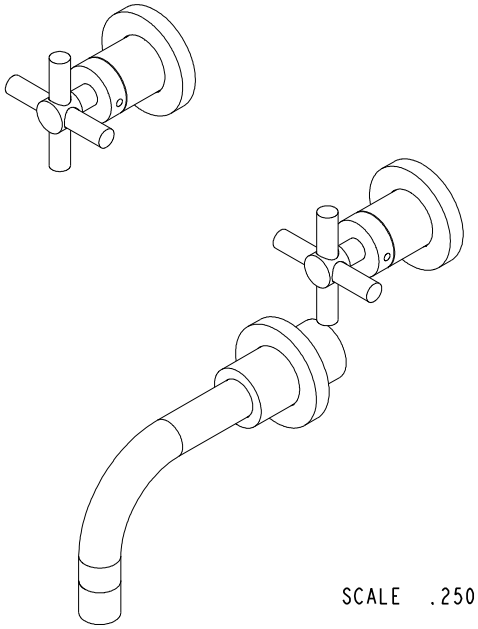

SCALE .250

Ray Smith Digitally signed by Ray Smith Date: 2020.11.17 11:05:59 -05'00'

COPYRIGHT 2005 BRASSTECH, INC. THESE DRAWINGS AND THE DESIGNS DEPICTED HEREIN ARE THE PROPRIETARY PROPERTY OF BRASSTECH. ANY USE OR REPRODUCTION IS SUBJECT TO THE EXPRESS APPROVAL OF BRASSTECH. UNAUTHORIZED USE IS STRICTLY PROHIBITED. ALL RIGHTS RESERVED.

ZONE	REV	DESCRIPTION	DATE	APPROVED
-	C	EN-3961-2	05/22/20	R.S.
-	B	EN-3072	06/07/16	R.S.

		-	-
TESTING	-	-	-
ASSEMBLY	-	-	-
PLATING	-	-	-
POLISHING	-	NEXT ASSY	USED ON
MACHINING	-	APPLICATION	
TOOLING FIXTURE #		REMOVE ALL BURRS AND SHARP EDGES	

UNITS ARE: INCHES [MM]
TOLERANCES ARE:
FRACTIONS ±1/16" DECIMALS .X ±.1 [2.5] .XX ±.06 [1.5] ANGLES ±1°
(X.XXX) DENOTES CRITICAL DIMS.
ALL THREADS ARE CRITICAL

DRAWN	JINSON	05/22/20
CHECKED	R.S.	05/22/20
APPROVED	R.S.	05/22/20

BRASSTECH INCORPORATED
2001 CARNEGIE AVE.
SANTA ANA, CA 92705
(949) 417-5207

TRIM KIT - 3-995

DWG NO. 3-995 REV C

SCALE .375 REF. - SHEET 1 OF 3

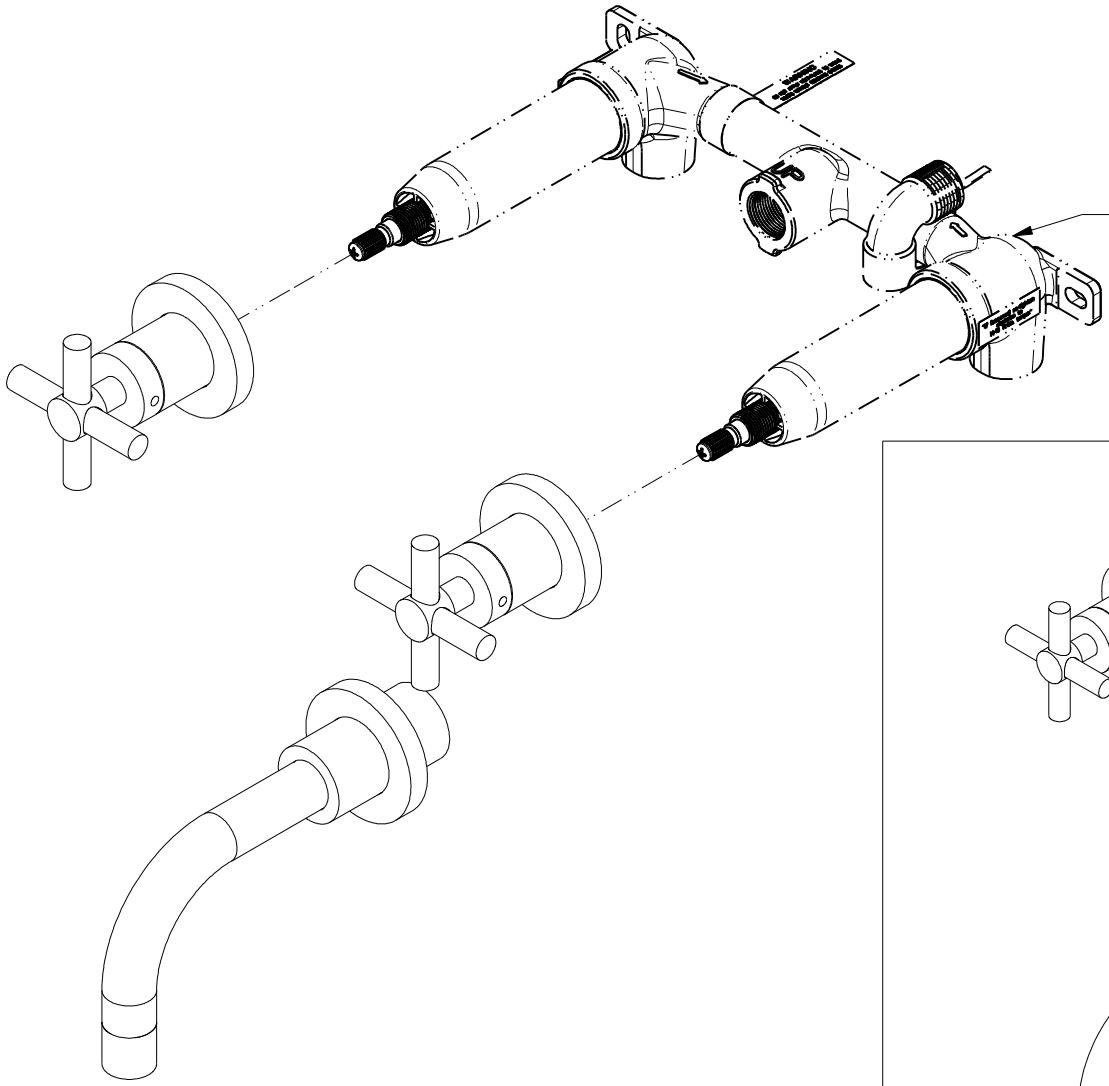

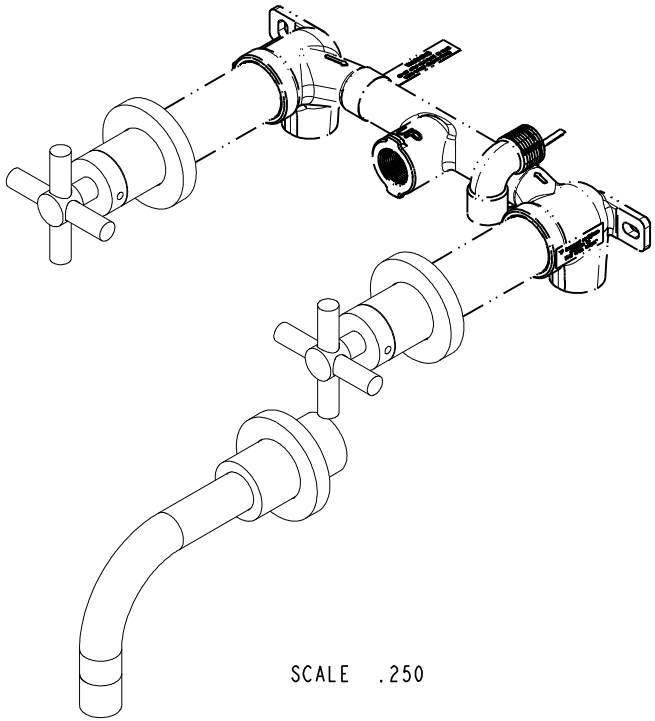

BRASSTECH INCORPORATED
2001 CARNEGIE AVE.
SANTA ANA, CA 92705
(949) 417-5207

DWG NO.	REV
3-995	C

SCALE .325	REF. -	SHEET 2 OF 3

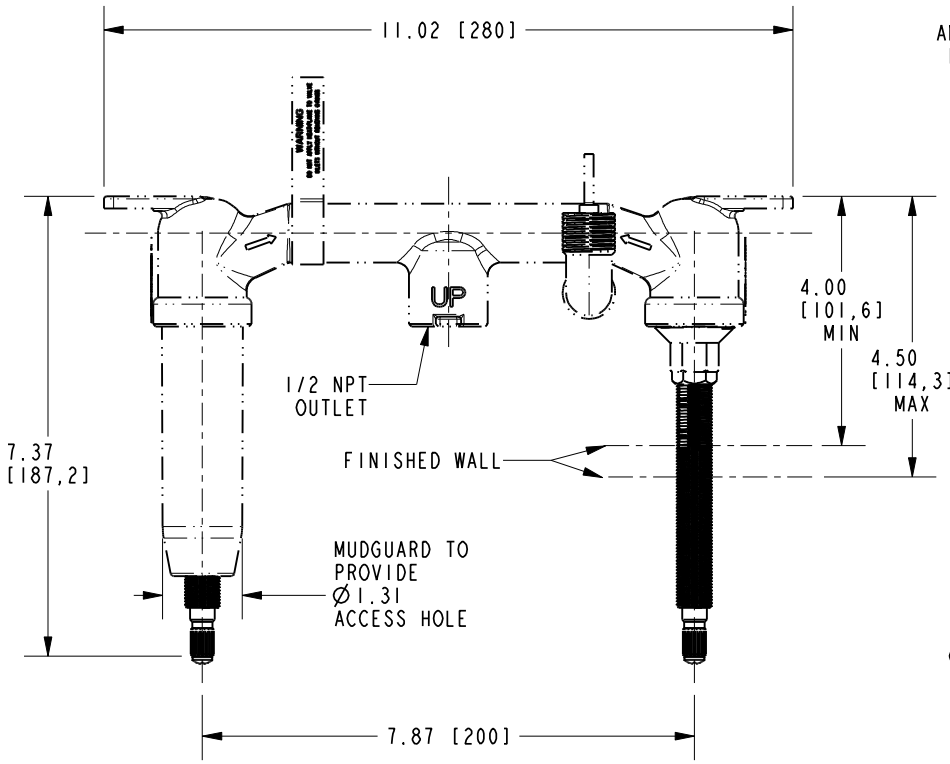

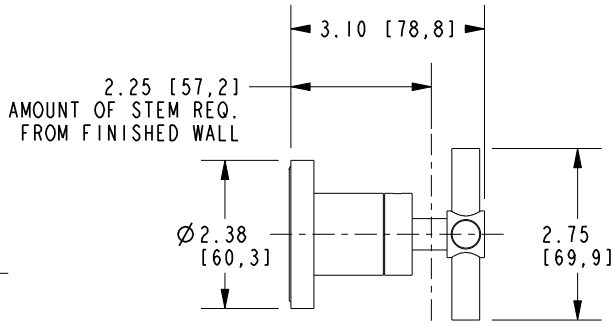

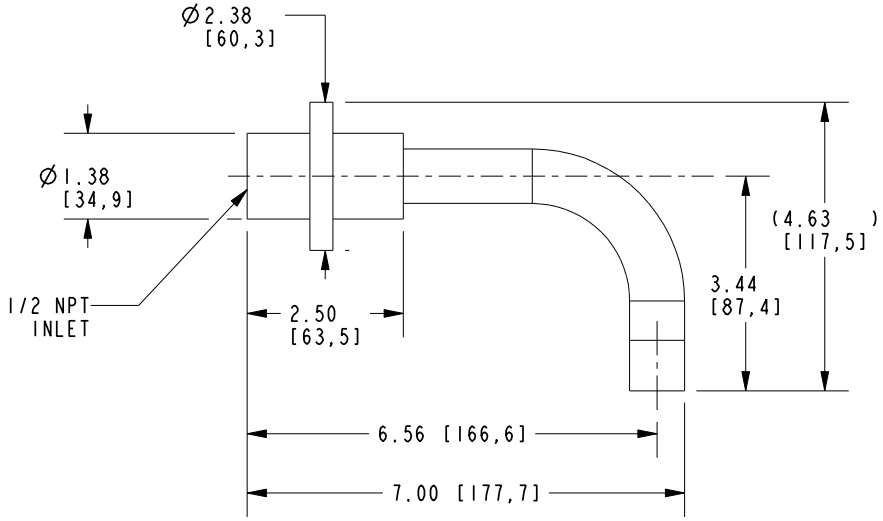

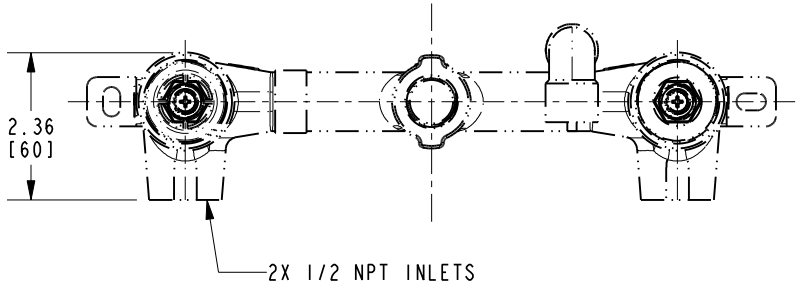

BRASSTECH INCORPORATED

2001 CARNEGIE AVE.
SANTA ANA, CA 92705
(949) 417-5207

DWG NO.	REV
3-995	C

SCALE .325	REF. -	SHEET 3 OF 3