NOTES:

1. TO INSPECT ASSEBMLY, FOLLOW FIRST ARTICLE AND IN PROCESS INSPECTION SHEET.
2. PUT THESE ITEMS IN SEPARATE PLASTIC BAGS.
3. TORQUE TO 8 +/-0.5 LB-FT.
4. APPLY THIN COAT OF SILICON GREASE FOR ALL O-RINGS BEFORE INSTALLATION.
5. APPLY LOCTITE 242, IF SCREW DOES NOT HAVE NYLON PATCH.
6. APPLY LOCTITE 680.
7. PULL OUT HOSE AND APPLY SILICON GREASE, BETWEEN HOUSE AND SPOUT, 10" FROM OUTLET TO HOSE.
8. TORQUE SWIVEL NUT TO 19 +/-2 LB-IN.
9. TORQUE TO 10 +/-2 LB-FT.
10. TORQUE TO 7 +/-2 LB-IN.
11. PARTIALLY THREAD MOUNTING KIT ONTO SHANK.
12. DO NOT DOCK SPRAY HEAD TO SPOUT WHEN PACKAGING.
13. PLACE ZIP TIE 2" FROM BOTTOM OF SHANK.

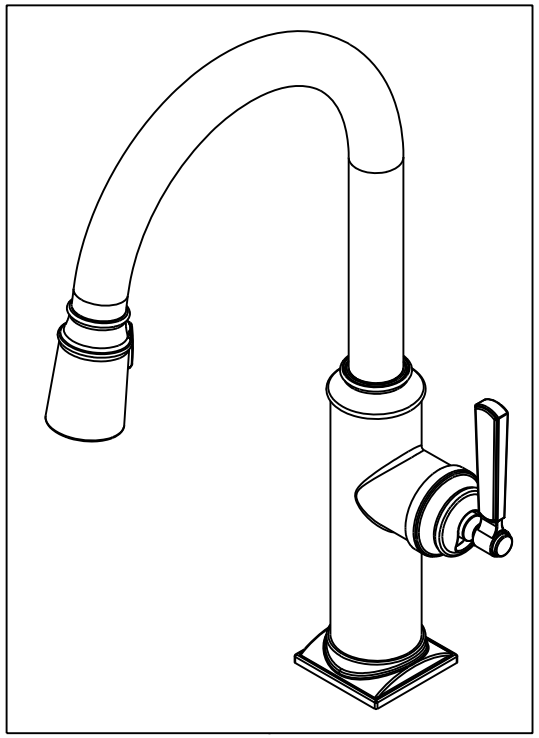

## BILL OF MATERIAL (CURRENT LEVEL)

| ITEM | PT/ASSY | DESCRIPTION | TYPE | QTY. |
|---|---|---|---|---|
| 1 | 20-222 | BASE RING ASM | ASSEMBLY | 1 |
| 2 | 20-223 | MAIN BODY ASM, TAFT | ASSEMBLY | 1 |
| 3 | 13664 | COLLAR | PART | 1 |
| 4 | 13672 | PULLDOWN COLLAR ADAPTER | PART | 1 |
| 5 | 91608 | O-RING, #2-122, EPDM, 65-75 DURO | PART | 1 |
| 6 | 12667 | SPOUT ADAPTER | PART | 1 |
| 7 | 91030 | O-RING, #2- 115, EPDM, 65-75 DURO, NSF 61 | PART | 4 |
| 8 | 91712 | SLEEVE | PART | 1 |
| 9 | 13385 | PULLDOWN SPOUT - LONG | PART | 1 |
| 10 | 91544 | MAGNET DOCKING | ASSEMBLY | 1 |
| 11 | 3-597 | SPRAY HEAD, TAFT | ASSEMBLY | 1 |
| 12 | 11877 | HOSE, PULLDOWN SWIVEL | ASSEMBLY | 1 |
| 13 | 1-064 | SINGLE LEVER CARTRIDGE | PART | 1 |
| 14 | 12839 | HANDLE HUB | PART | 1 |
| 15 | 1-266 | CART. RETAINER ASM | ASSEMBLY | 1 |
| 16 | 12850 | HANDLE LEVER | PART | 1 |
| 17 | 91534 | CARTRIDGE STEM INSERT | PART | 1 |
| 18 | 91255 | O-RING, #2- 011, EPDM, 65-75 DURO,NSF-61 | PART | 2 |
| 19 | 91568 | RETAINER CLIP | PART | 1 |
| 20 | 1-256 | MOUNTING KIT | ASSEMBLY | 1 |
| 21 | 91341 | ZIP TIE | PART | 1 |
| 22 | 98044 | LABEL - HOT | PART | 1 |
| 23 | 1-286 | WEIGHT ASM | ASSEMBLY | 1 |
| 24 | 20-226 | CAP ASM | ASSEMBLY | 1 |
| 25 | 92477 | SCRW, M4 X 16 SKT FLT HD SS | PART | 1 |
| 26 | 13464 | ADAPTER EXTENSION | PART | 1 |
| 27 | 91114 | O-RING, #2- 116, EPDM, 65-75 DURO, NSF 61 | PART | 2 |

| ZONE | REV | DESCRIPTION | DATE | APPROVED |
|---|---|---|---|---|
| - | G | EN-4325c | 05/26/21 | J.M. |
| - | F | EN-4200c | 01/08/21 | J.M. |
| - | E | EN-4118 | 01/02/21 | J.M. |
| - | D | EN-4200A | 09/24/20 | C.G. |
| - | C | EN-4167 | 06/08/20 | JMR |
| - | B | EN-3931B | 09/17/19 | V.V. |
| - | A | EN-3413b | 11/14/17 | JM |
| - | - | EN-3076 | 09/26/17 | JM |

COPYRIGHT 2005 BRASSTECH, INC. THESE DRAWINGS AND THE DESIGNS DEPICTED HEREIN ARE THE PROPRIETARY PROPERTY OF BRASSTECH. ANY USE OR REPRODUCTION IS SUBJECT TO THE EXPRESS APPROVAL OF BRASSTECH. UNAUTHORIZED USE IS STRICTLY PROHIBITED. ALL RIGHTS RESERVED.

| | | | |
|---|---|---|---|
| | | - | - |
| TESTING | - | - | - |
| ASSEMBLY | - | - | - |
| PLATING | - | - | - |
| POLISHING | - | NEXT ASSY | USED ON |
| MACHINING | - | APPLICATION | |
| TOOLING FIXTURE # | | REMOVE ALL BURRS AND SHARP EDGES | |

UNITS ARE: INCHES [MM]
TOLERANCES ARE:
FRACTIONS ±1/16" DECIMALS .X ±.1 [2,5] .XX ±.06 [1,5] ANGLES ±1°
(X.XXX) DENOTES CRITICAL DIMS.
ALL THREADS ARE CRITICAL

| | | |
|---|---|---|
| DRAWN | JINSON | 03/29/21 |
| CHECKED | R.S. | 03/29/21 |
| APPROVED | R.S. | 03/29/21 |

BRASSTECH INCORPORATED
2001 CARNEGIE AVE.
SANTA ANA, CA 92705
(949) 417-5207

# KITCHEN PULLDOWN

DWG NO. 3170-5103 REV G

SCALE .250 REF. - SHEET 1 OF 3

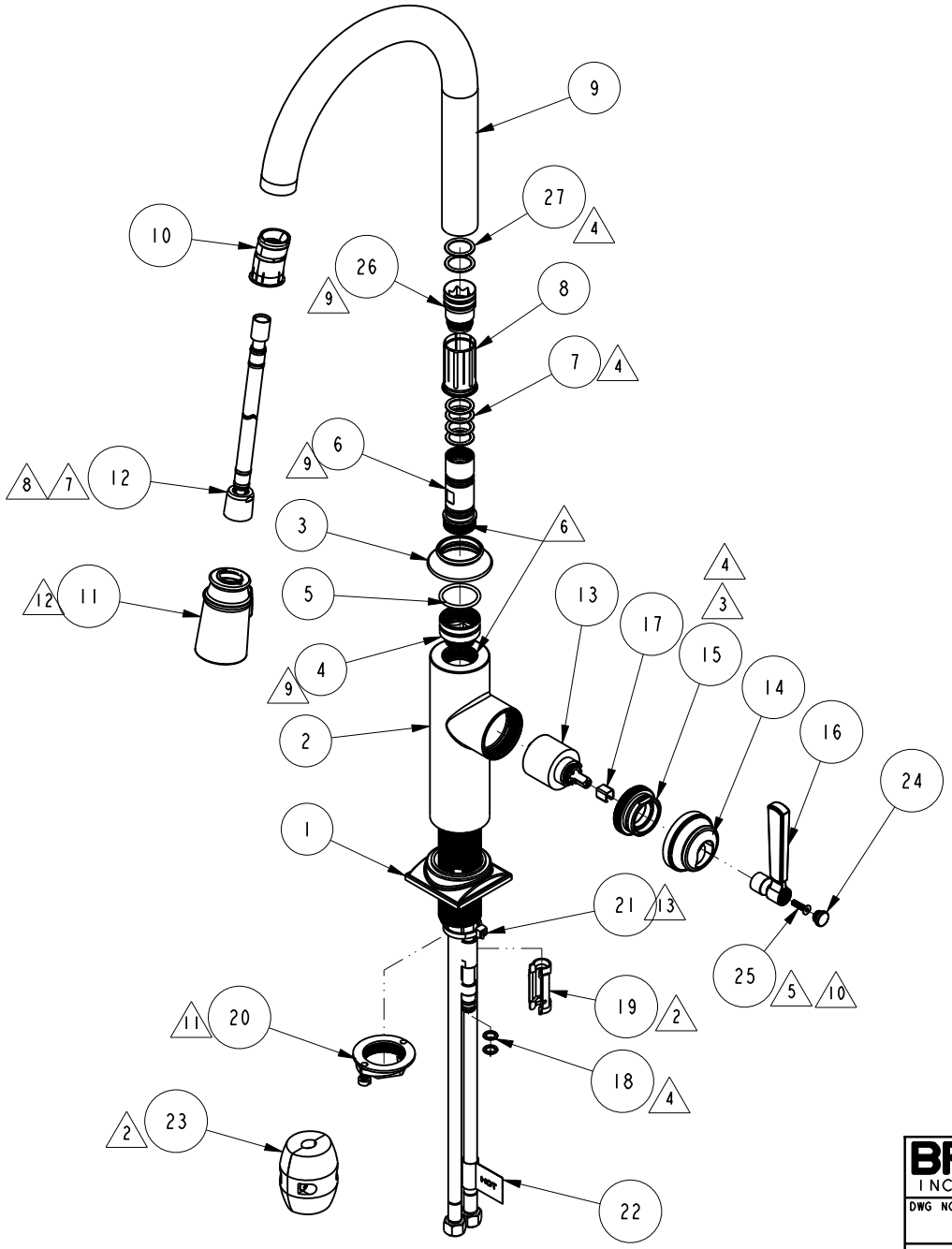


**BRASSTECH** INCORPORATED

2001 E. CARNEGIE AVE.
SANTA ANA, CA 92705
(949) 417-5207

| DWG NO. | REV |
|---|---|
| 3170-5103 | G |

| SCALE | REF. | SHEET |
|---|---|---|
| .175 | - | 2 OF 3 |

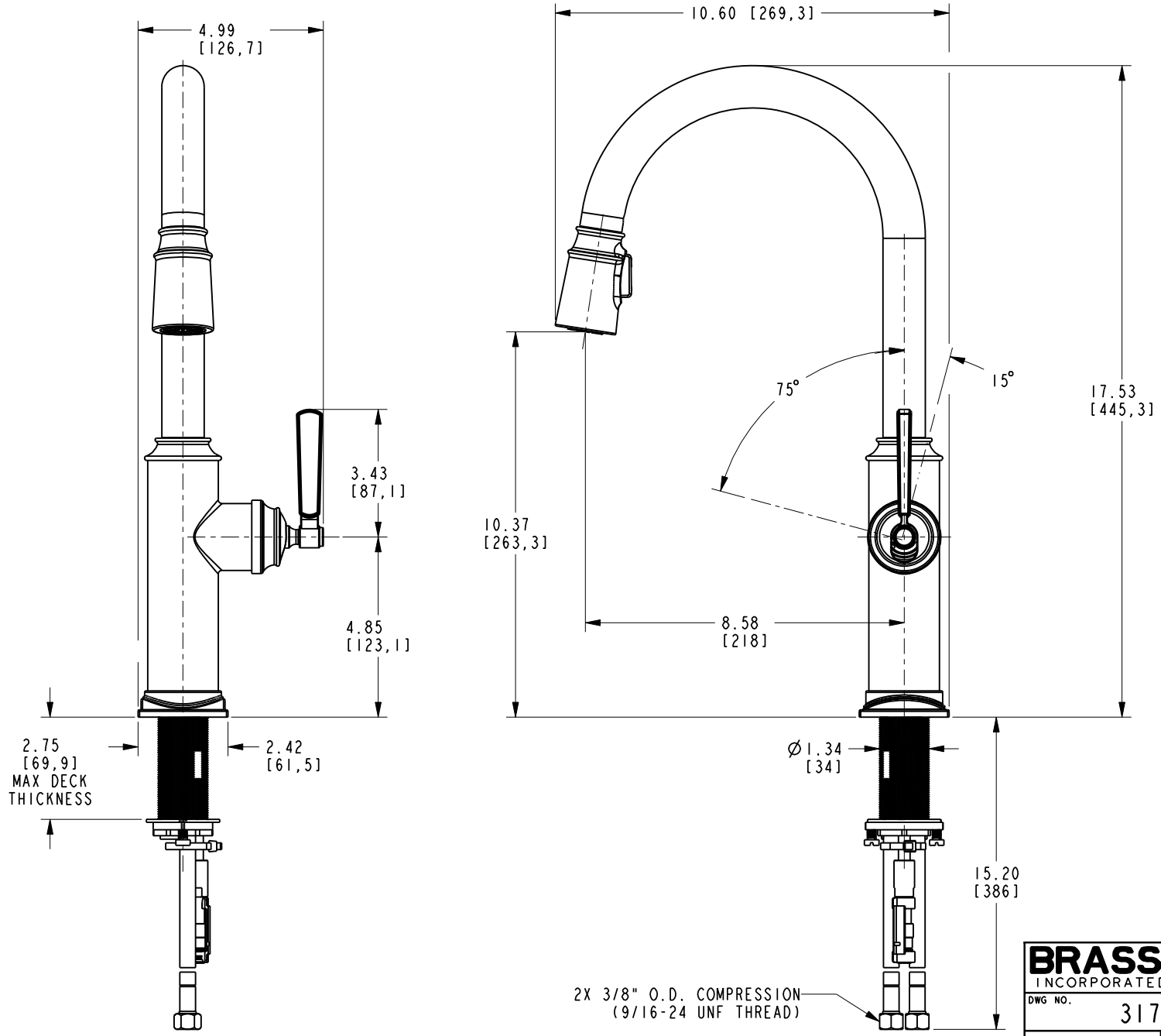


**BRASSTECH** INCORPORATED

2001 E. CARNEGIE AVE.
SANTA ANA, CA 92705
(949) 417-5207

| DWG NO. | REV |
|---|---|
| 3170-5103 | G |

| SCALE | REF. | SHEET |
|---|---|---|
| .250 | - | 3 OF 3 |