NOTES:

1. TO INSPECT ASSEBMLY, FOLLOW FIRST ARTICLE AND IN PROCESS INSPECTION SHEET.

2. APPLY LOCTITE 680 TO THREADS

3. APPLY THIN COAT OF SILICONE GREESE TO O-RINGS

4. UPON ASSEMBLY 7-736 ARM TO SUSTAIN ITS OWN WEIGHT WHEN ROTATED

BILL OF MATERIAL (CURRENT LEVEL)

ITEM	PT/ASSY	DESCRIPTION	TYPE	QTY.
1	40842	ROSETTE	PART	2
2	02XXG	MOUNTING BRACKET	PART	2
3	1-206	HARDWARE PACK	ASSEMBLY	2
4	40688	PIVOTING TISSUE POST RIGHT	PART	1
5	40689	PIVOTING TISSUE POST LEFT	PART	1
6	91464	WSHR, .254 ID X .625 OD X .063 THK, FLT, ACETAL	PART	1
7	7-736	PIVOTING TISSUE ARM	PART	1
8	91254	POLY BUMPER PAD, DIA .250" X .062"	PART	1
9	92893	PIVOT SCREW	PART	1
10	91098	O-RING, #2-007, EPDM, 65-75 DURO	PART	2
11	92461	SCRW, M6 X 1 X 6 SKT HD CONE PT SS	PART	2
12	10615	HEX KEY, 3MM ALLOY STEEL	PART	1

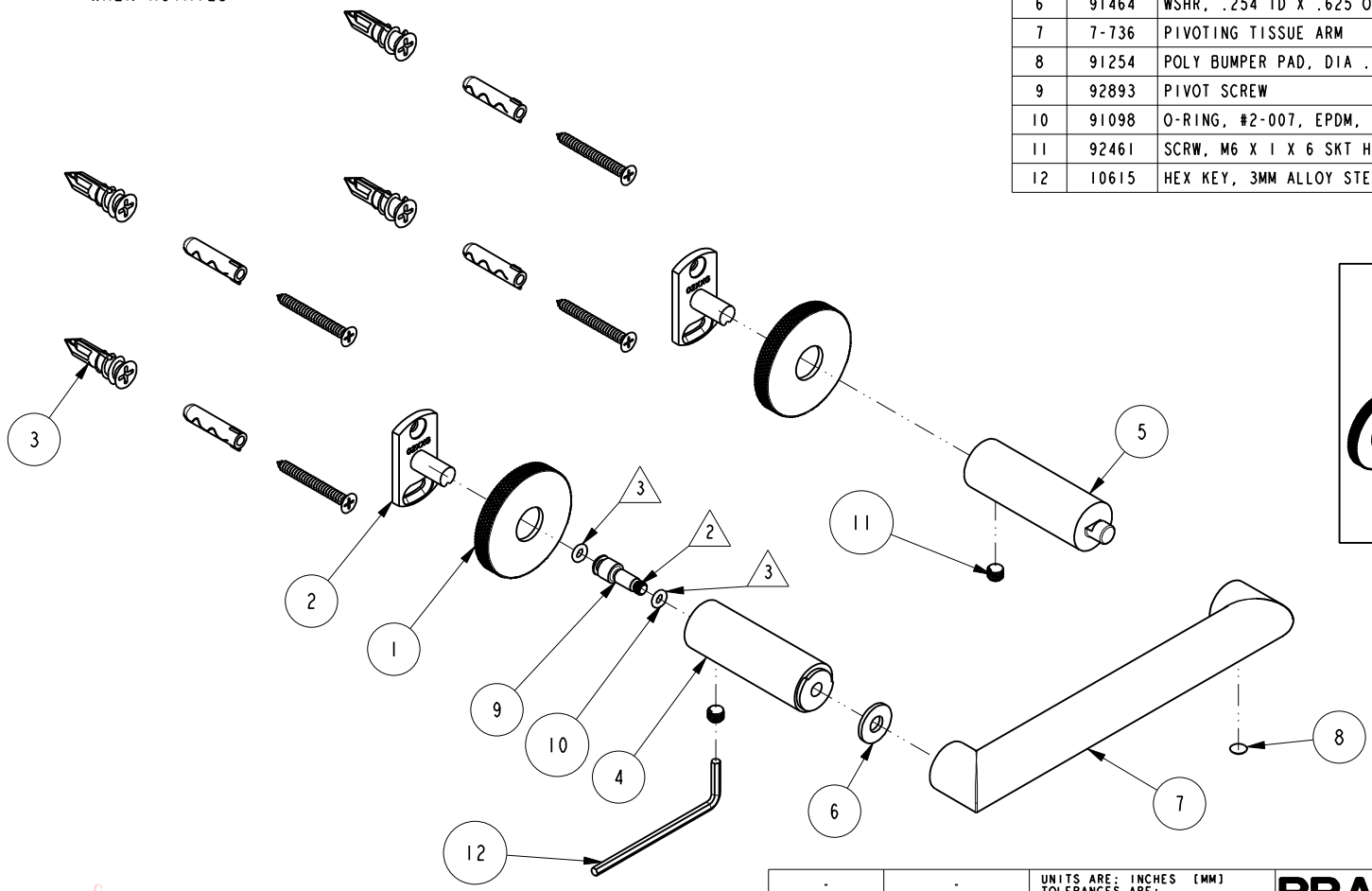

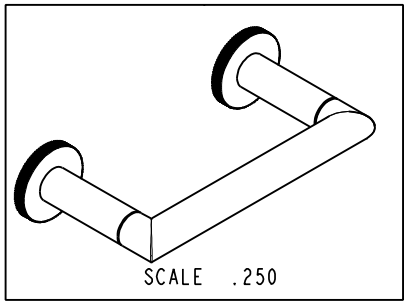

Ray Smith
Digitally signed by Ray Smith
Date: 2021.11.08 16:36:32 -05'00'

ZONE	REV	DESCRIPTION	DATE	APPROVED
-	A	EN-4115a	09/15/21	R.S.
-	-	EN-4115	05/15/20	J.M.

COPYRIGHT 2005 BRASSTECH, INC. THESE DRAWINGS AND THE DESIGNS DEPICTED HEREIN ARE THE PROPRIETARY PROPERTY OF BRASSTECH. ANY USE OR REPRODUCTION IS SUBJECT TO THE EXPRESS APPROVAL OF BRASSTECH. UNAUTHORIZED USE IS STRICTLY PROHIBITED. ALL RIGHTS RESERVED.

TESTING	-	-	-
ASSEMBLY	-	-	-
PLATING	-	-	-
POLISHING	-	NEXT ASSY	USED ON
MACHINING	-	APPLICATION	
TOOLING FIXTURE #		REMOVE ALL BURRS AND SHARP EDGES	

UNITS ARE: INCHES [MM]
TOLERANCES ARE:
FRACTIONS ±1/16" DECIMALS .X ±.1 [2,5] .XX ±.06 [1,5] ANGLES ±1°
(X.XXX) DENOTES CRITICAL DIMS.
ALL THREADS ARE CRITICAL

DRAWN	JINSON	09/15/21
CHECKED	R.S.	09/15/21
APPROVED	R.S.	09/15/21

BRASSTECH INCORPORATED
2001 CARNEGIE AVE.
SANTA ANA, CA 92705
(949) 417-5207

PIVOTING TISSUE HOLDER

DWG NO. 3290-1500 REV A

SCALE .375 REF. - SHEET 1 OF 2

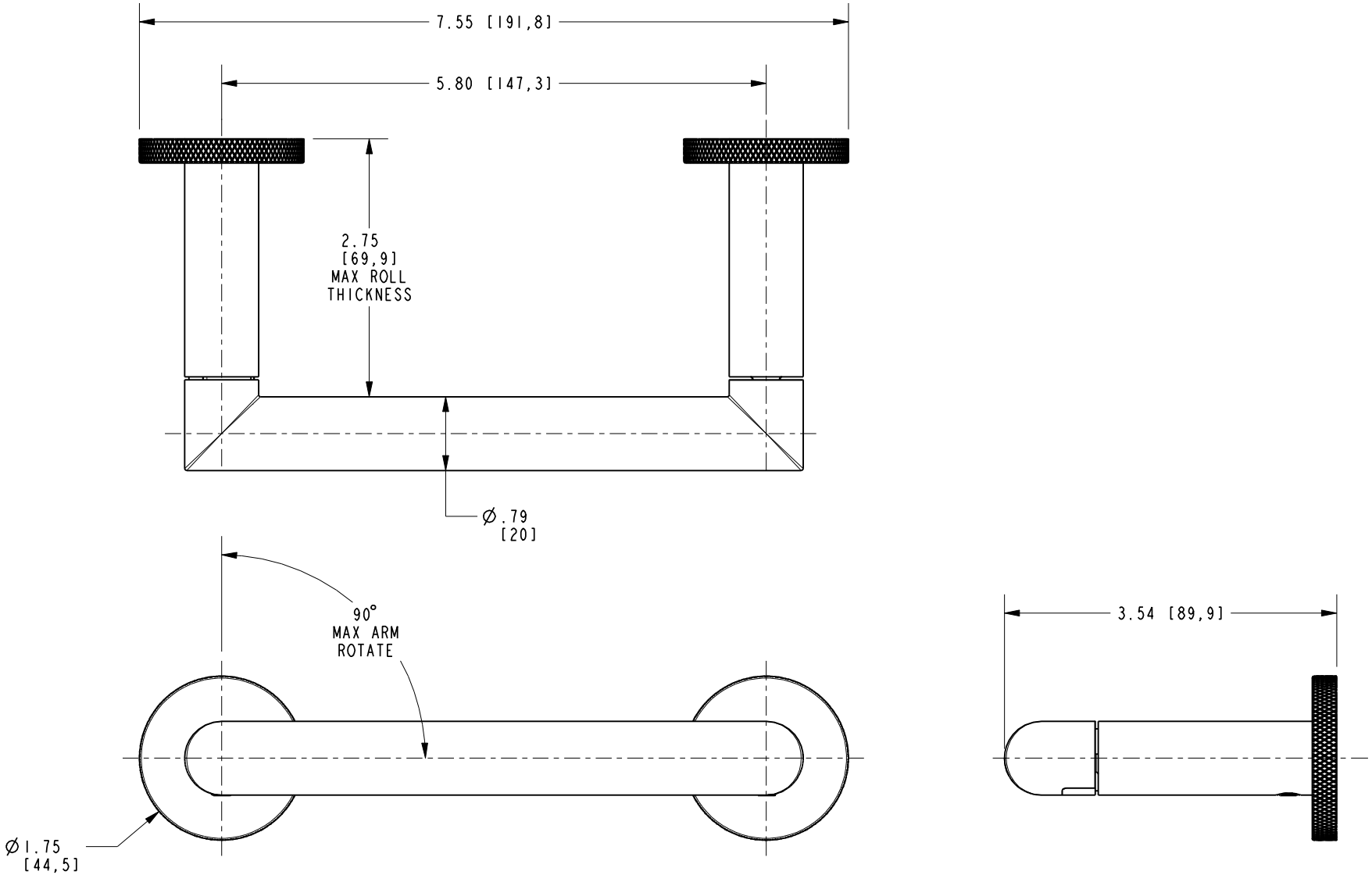

BRASSTECH INCORPORATED

2001 E. CARNEGIE AVE.
SANTA ANA, CA 92705
(949) 417-5207

DWG NO.	REV
3290-1500	A

SCALE	REF.	SHEET
.625	-	2 OF 2