REPLACEMENT PARTS

ITEM	PT/ASSY	SPECIFY FINISH	DESCRIPTION
1	20-501	YES	TUB AND SHOWER PLATE ASM
2	91019		O-RING, #2- 014, EPDM, 65-75 DURO, NSF 61
3	H-78		TAPE NEO
4	20-482	YES	KNURLED DIVERTER TRIM KIT
5	91065		UPPER LINK PLASTIC DIVERTER
6	30-132	YES	CROSS HANDLE TRIM
7	20-456	YES	HANDLE ESCUTCHEON ASSY
8	91762		O-RING, #2-132, EP, 50 DURO - GREY
9	20-449	YES	HANDLE UPPER ASSY
10	10259		HEX NUT 9/16 X 20 MADE

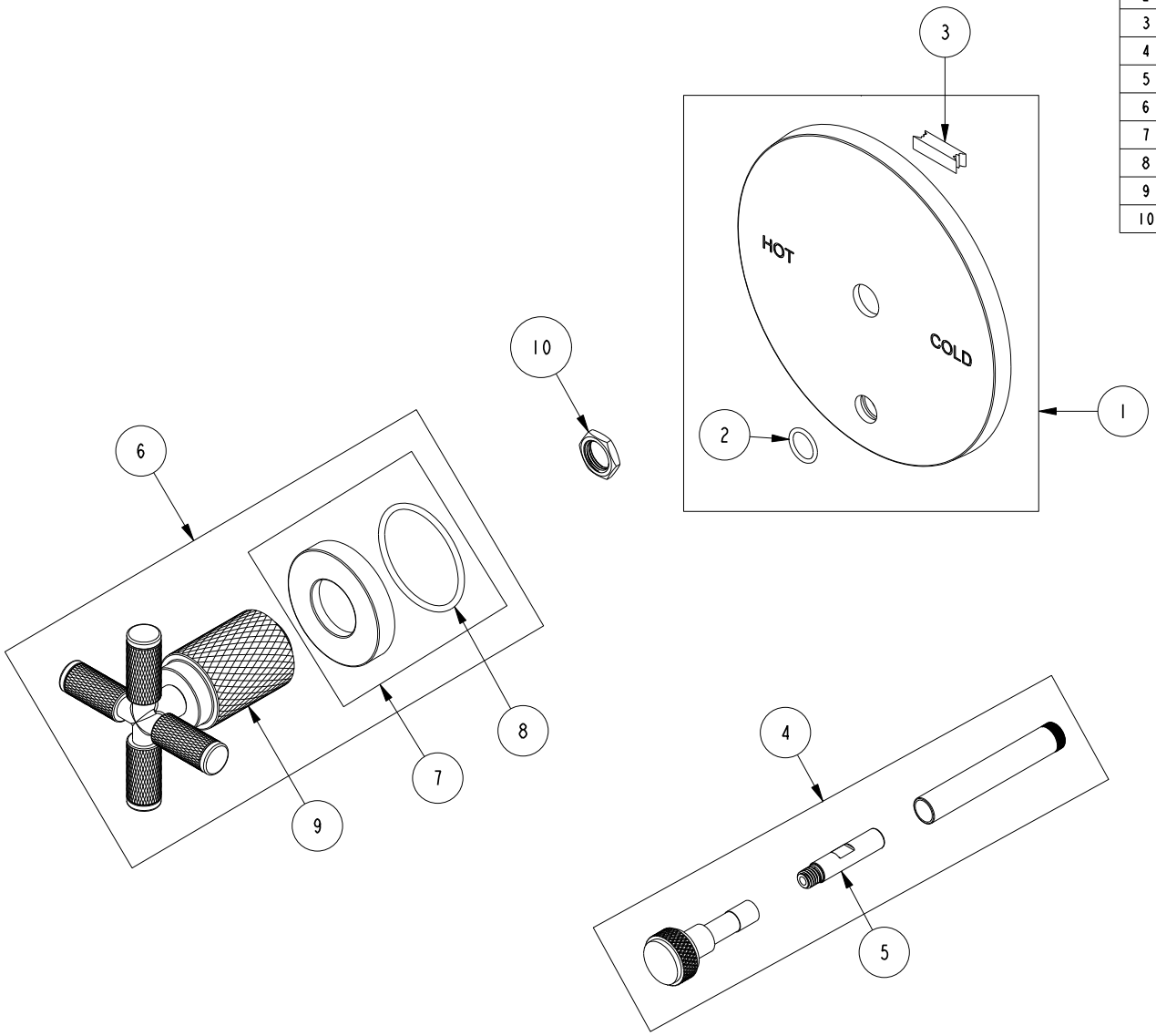

TUB AND SHOWER TRIM

5-3432BP

REV - EN-5024 09/30/25

NEWPORT BRASS

t: 949.417.5207 | www.newportbrass.com