NOTES:

1. TO INSPECT ASSEMBLY, FOLLOW FIRST ARTICLE AND IN PROCESS INSPECTION SHEET.

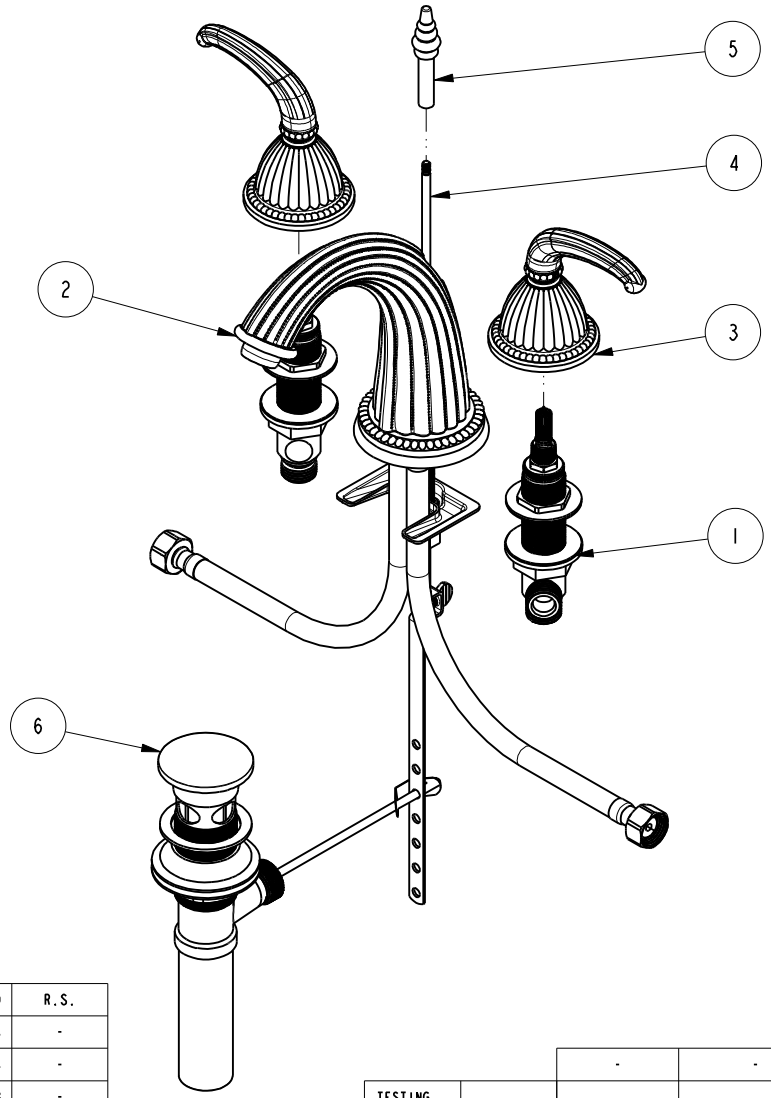

BILL OF MATERIAL (CURRENT LEVEL)

ITEM	PT/ASSY	DESCRIPTION	TYPE	QTY.
1	1-525	W/S VALVE ASM	ASSEMBLY	1
2	3-342	SPOUT ASSEMBLY	ASSEMBLY	1
3	3-159	TRIM KIT - STOP VALVE	ASSEMBLY	2
4	10288	3/16" POP UP ROD	PART	1
5	10973	POP-UP KNOB W/RINGS	PART	1
6	325	POP UP ASSEMBLY	ASSEMBLY	1

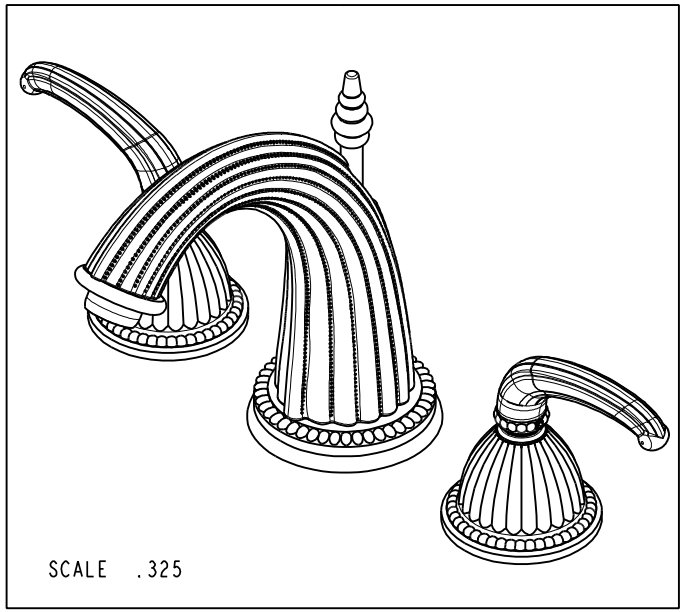

ZONE	REV	DESCRIPTION	DATE	APPROVED
-	G	EN-4300m	10/29/20	R.S.
-	F	EN-2750a	06/25/14	-
-	E	EN-2750	05/06/14	-
-	D	EN-2628	10/17/13	-
-	C	EN-1011	08/30/13	-
-	B	EN-1616	09/13/10	-
-	A	EO-1011	06/23/08	-
-	-	EO-0859	07/19/17	-

COPYRIGHT 2005 BRASSTECH, INC. THESE DRAWINGS AND THE DESIGNS DEPICTED HEREIN ARE THE PROPRIETARY PROPERTY OF BRASSTECH. ANY USE OR REPRODUCTION IS SUBJECT TO THE EXPRESS APPROVAL OF BRASSTECH. UNAUTHORIZED USE IS STRICTLY PROHIBITED. ALL RIGHTS RESERVED.

TESTING	-	-	-
ASSEMBLY	-	-	-
PLATING	-	-	-
POLISHING	-	NEXT ASSY	USED ON
MACHINING	-	APPLICATION	
TOOLING FIXTURE #		REMOVE ALL BURRS AND SHARP EDGES	

UNITS ARE: INCHES [MM]
TOLERANCES ARE:
FRACTIONS ±1/16" DECIMALS .X ±.1 [2,5] .XX ±.06 [1,5] ANGLES ±1°
(X.XXX) DENOTES CRITICAL DIMS.
ALL THREADS ARE CRITICAL

DRAWN	JINSON	11/10/20
CHECKED	R.S.	11/10/20
APPROVED	R.S.	11/10/20

BRASSTECH INCORPORATED
2001 CARNEGIE AVE.
SANTA ANA, CA 92705
(949) 417-5207

WIDESPREAD FAUCET

DWG NO. 880C REV G

SCALE .225 REF. - SHEET 1 OF 2

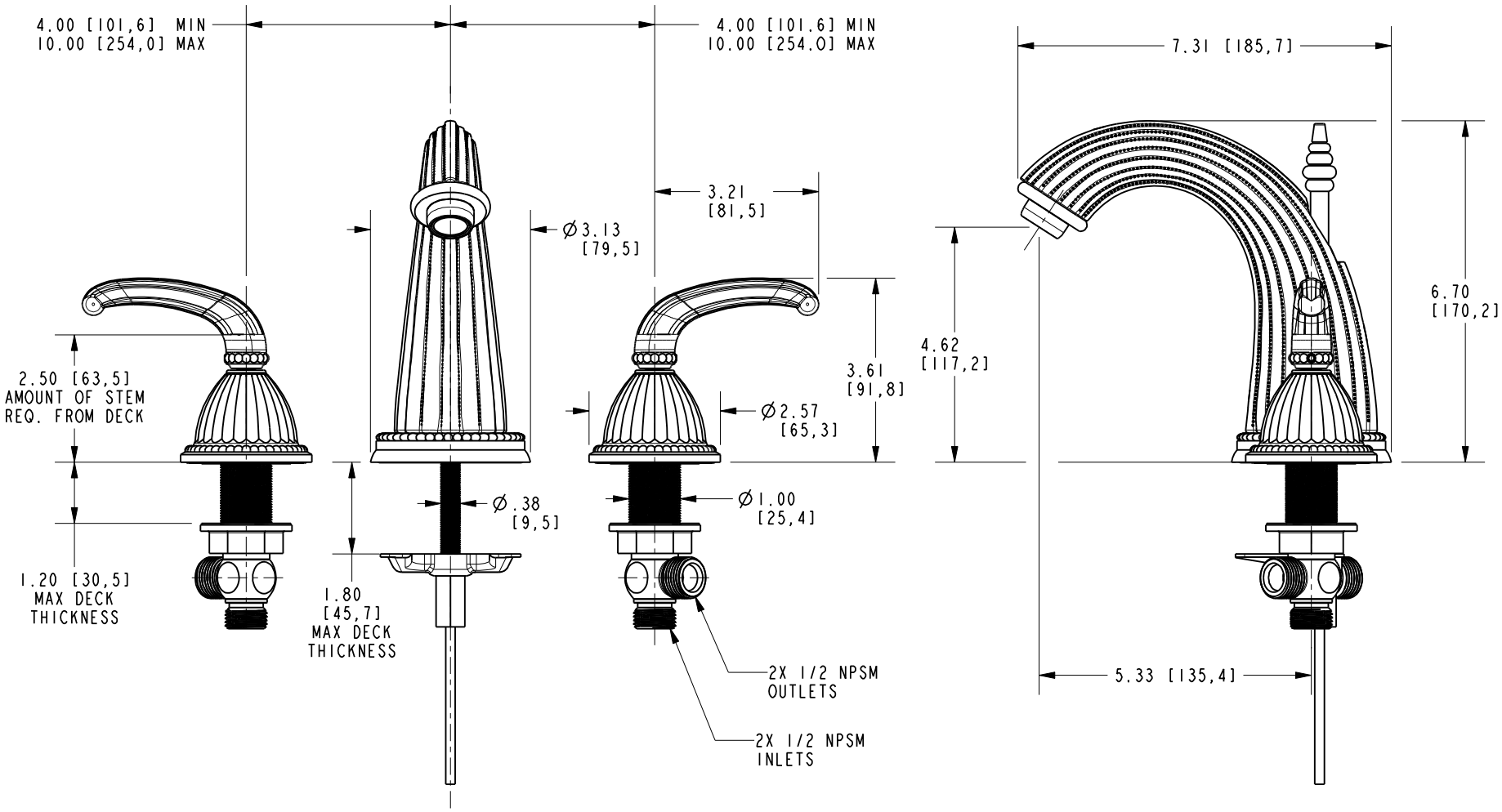

BRASSTECH INCORPORATED

2001 CARNEGIE AVE.
SANTA ANA, CA 92705
(949) 417-5207

DWG NO.	REV
880C	G

SCALE .325	REF. -	SHEET 2 OF 2