NOTES:

1. TO INSPECT ASSEMBLY, FOLLOW FIRST ARTICLE AND IN PROCESS INSPECTION SHEET.

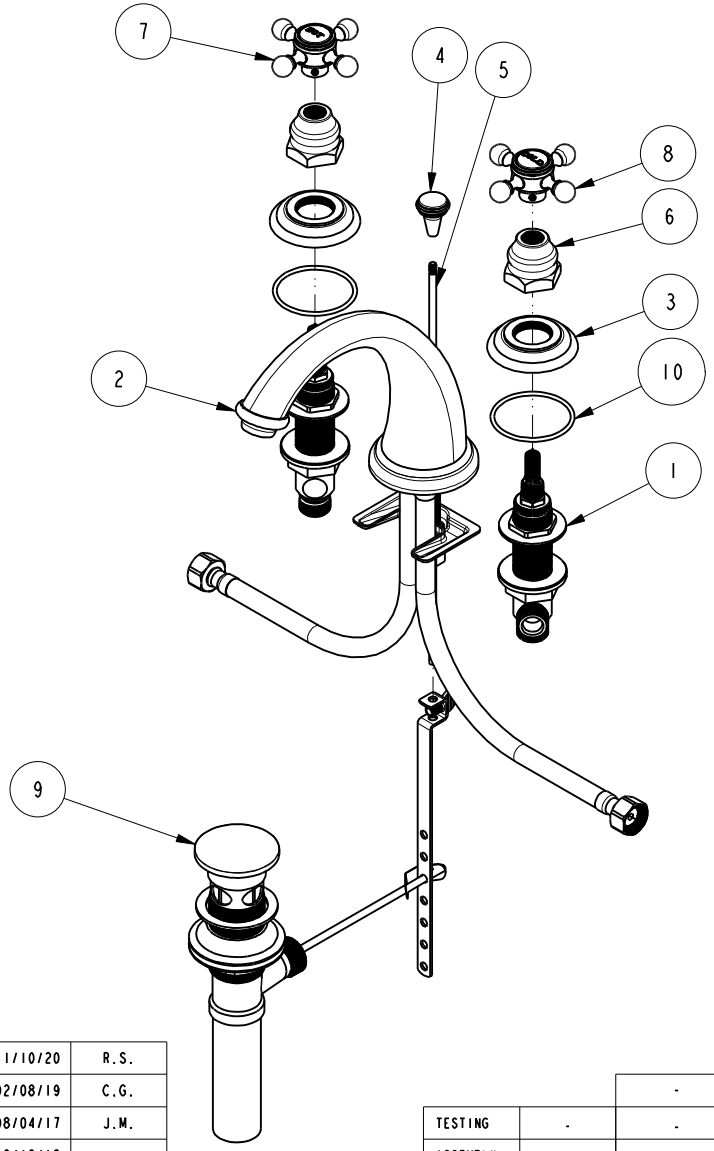

BILL OF MATERIAL (CURRENT LEVEL)

ITEM	PT/ASSY	DESCRIPTION	TYPE	QTY.
1	1-525	W/S VALVE ASM	ASSEMBLY	1
2	3-348	W/S SPOUT ASM	ASSEMBLY	1
3	10048	ESCUTCHEON W/S VALVE	PART	2
4	10021	POP-UP KNOB	PART	1
5	10288	3/16" POP UP ROD	PART	1
6	10523	HEX ESCUTCHEON BONNET	PART	2
7	2-141	HANDLE ONLY, HOT	ASSEMBLY	1
8	2-142	HANDLE ONLY, COLD	ASSEMBLY	1
9	325	POP UP ASSEMBLY	ASSEMBLY	1
10	91753	O-RING, # 2-136, EP, 50 DURO - GREY	PART	2

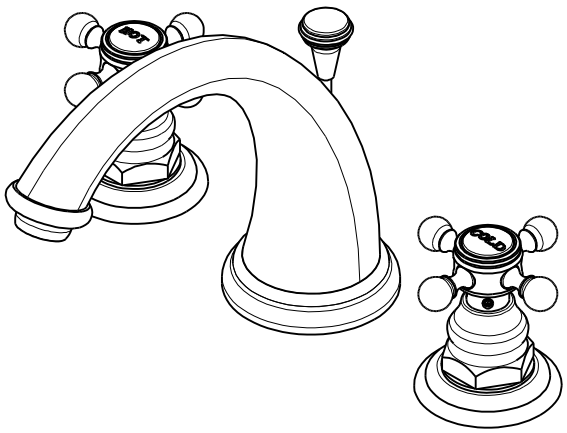

SCALE .325

ZONE	REV	DESCRIPTION	DATE	APPROVED
-	F	EN-4300m	11/10/20	R.S.
-	E	EN-3722	02/08/19	C.G.
-	D	EN-3371	08/04/17	J.M.
-	C	EN-2334	12/18/12	-
-	B	EN-1616	09/13/10	-
-	A	EO-1018	06/10/08	-
-	-	RELEASED	2000	-

COPYRIGHT 2005 BRASSTECH, INC. THESE DRAWINGS AND THE DESIGNS DEPICTED HEREIN ARE THE PROPRIETARY PROPERTY OF BRASSTECH. ANY USE OR REPRODUCTION IS SUBJECT TO THE EXPRESS APPROVAL OF BRASSTECH. UNAUTHORIZED USE IS STRICTLY PROHIBITED. ALL RIGHTS RESERVED.

TESTING	-	-	-
ASSEMBLY	-	-	-
PLATING	-	-	-
POLISHING	-	NEXT ASSY	USED ON
MACHINING	-	APPLICATION	
TOOLING FIXTURE #		REMOVE ALL BURRS AND SHARP EDGES	

UNITS ARE: INCHES [MM]
TOLERANCES ARE:
FRACTIONS DECIMALS ANGLES
±1/16" .X ±.1 [2,5] ±1°
.XX ±.06 [1,5]
(X.XXX) DENOTES CRITICAL DIMS.
ALL THREADS ARE CRITICAL

DRAWN	JINSON	11/10/20
CHECKED	R.S.	11/10/20
APPROVED	R.S.	11/10/20

BRASSTECH INCORPORATED
2001 CARNEGIE AVE.
SANTA ANA, CA 92705
(949) 417-5207

WIDESPREAD FAUCET

DWG NO. 890 REV F

SCALE .200 REF. - SHEET 1 OF 2

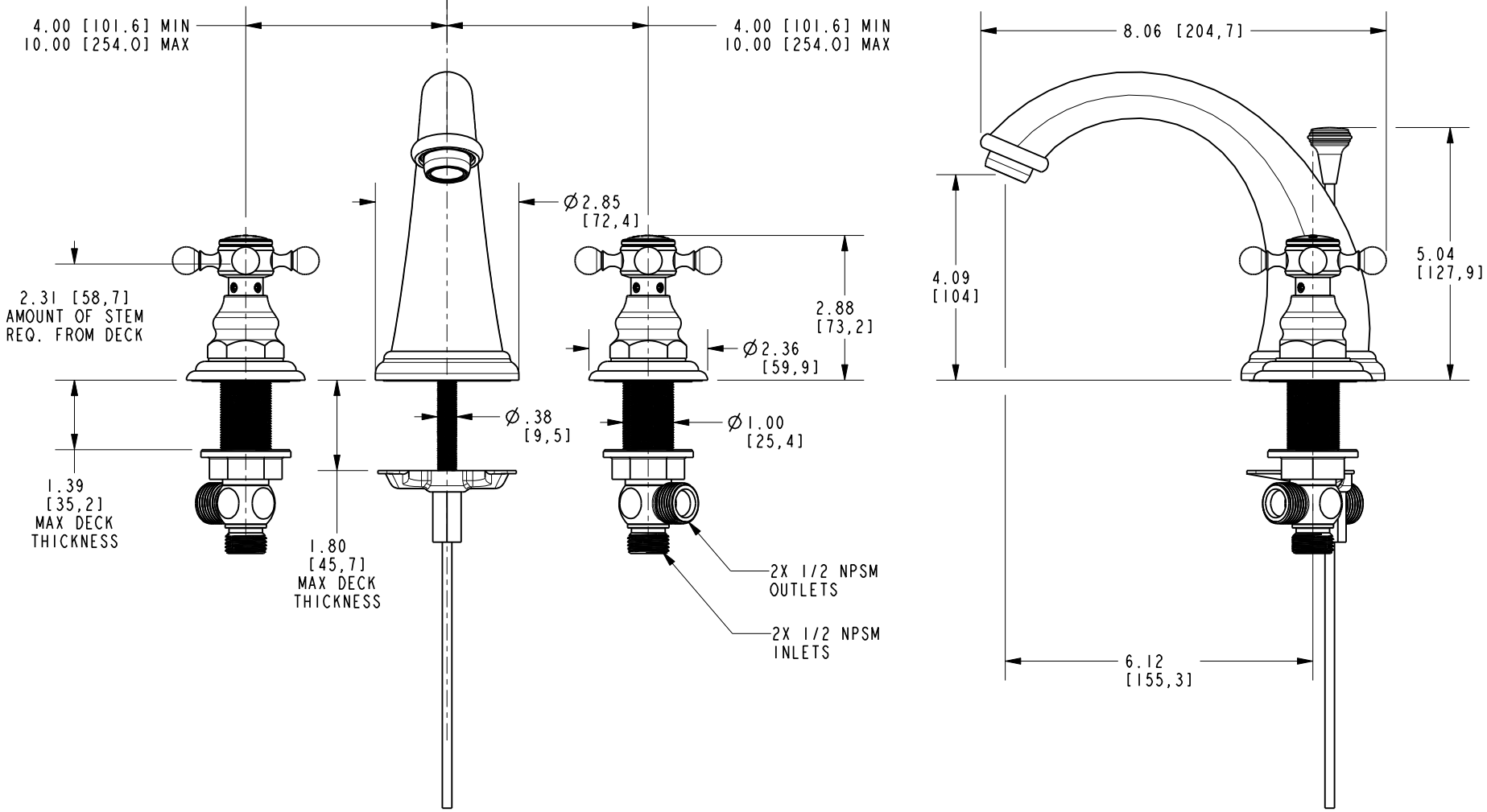

BRASSTECH INCORPORATED

2001 CARNEGIE AVE.
SANTA ANA, CA 92705
(949) 417-5207

DWG NO.	REV
890	F

SCALE .325	REF. -	SHEET 2 OF 2