NEWPORT BRASS

KIMBELL

TUB AND HANDSHOWER SET

3420-4283

Features

- Solid brass construction
- Quarter-turn washerless ceramic disc valve cartridges
- 12.80” (32.8 cm) tub spout reach (wall-center)
- 3” x 3/4” (7,6 cm x 1,9 cm) hand shower spray area
- For wall mounted configurations
- ADA compliant (handles only)
- 1.8 GPM (6.8 LPM) Max, hand shower only

Codes / Standards Compliance

Meets or exceeds the following at date of manufacture:

- ASME A112.18.1/CSA B125.1
- IAPMO/cUPC
- IPC
- ADA & ICC/ANSI A117.1 (handle only)
- Energy Policy Act of 1992
- EPA WaterSense
- California Energy Commission
- ASME A112.18.3 (Back Flow) - Double check valves at hand shower inlet
- All applicable US Federal and State material regulations

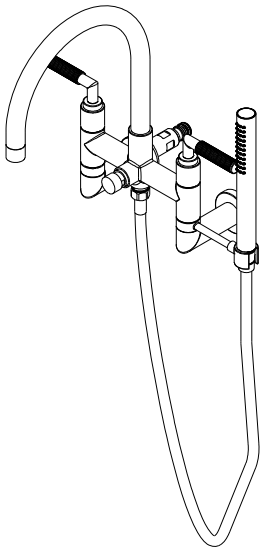

ACCESSORY REQUIRED

System Element	Wall Mount Nipple Kit	Tempering valve
Description	Ecentric Nipple For Wall Mount Tub Filler	Thermostatic mixing valve (Temperature regulator)
Inlet/Outlet Size	1/2" NPT	1/2'' direct sweat connections
Part Number	1-483	1-535
Image	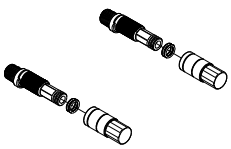	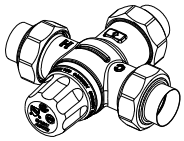

t: 949.417.5207 | www.newportbrass.com

NEWPORT BRASS

PRODUCT DIMENSIONS *(Units are in inches)*

Product Dimensions are provided for reference only. For specific product installation guidelines, please reference the Installation Instructions of the product being installed.

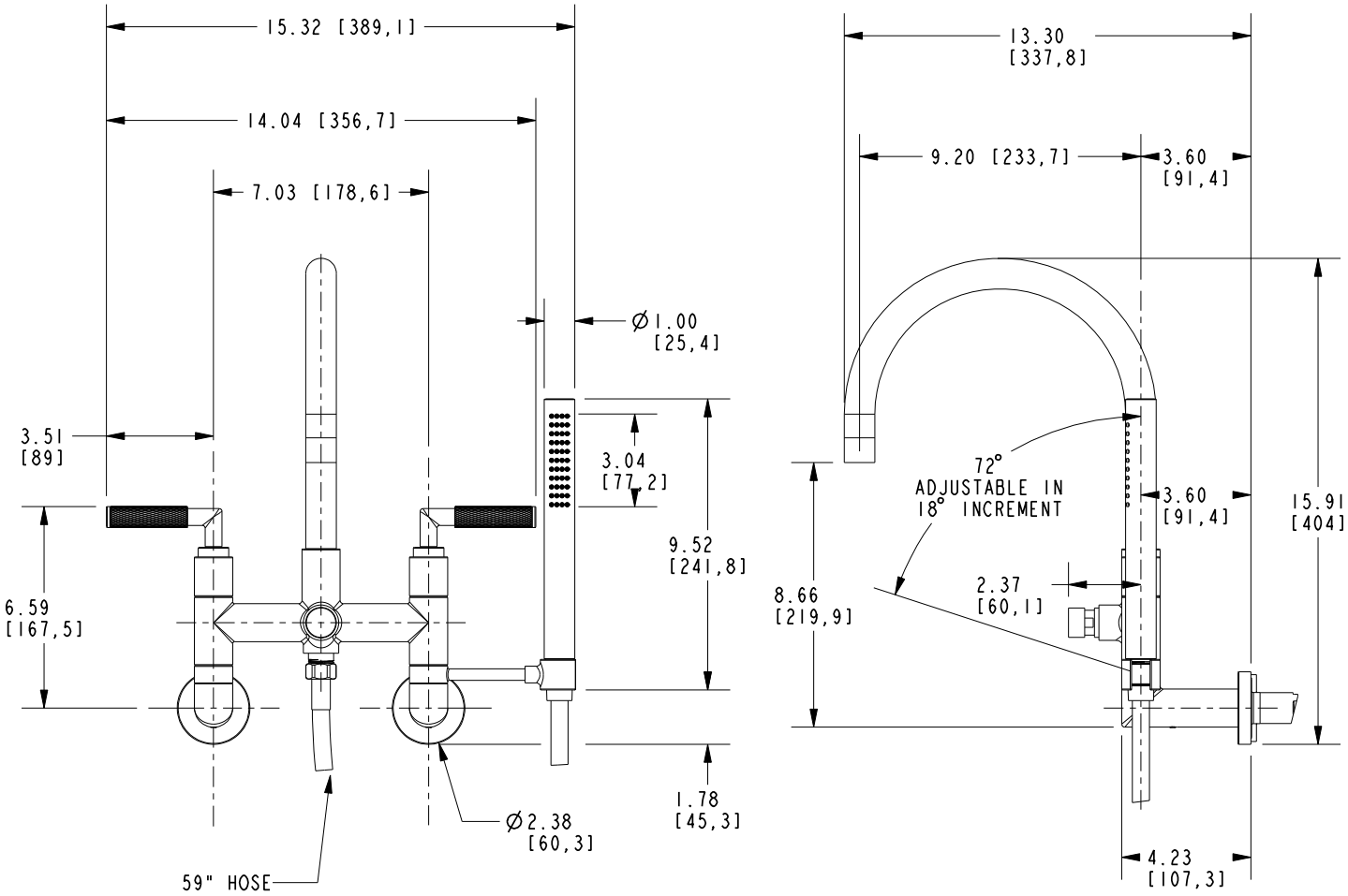

TUB AND HANDSHOWER SET

3420-4283

Newport Brass reserves the right (1) to make changes in specifications and materials, and (2) to change or discontinue models, both without notice or obligation. See current full-line price book or www.newportbrass.com for finish options and product availability.