NEWPORT BRASS

KIMBELL

BRIDGE TUB AND HANDSHOWER KIT

3430-4262

Features

- Solid brass construction
- Quarter-turn washerless ceramic disc valve cartridges
- 9.25 gallons (35 liters) per minute spout maximum flow rate
- 3/4" NPT hot and cold inlet fittings
- 9.20" (23.4 cm) tub spout reach from inlet fittings (c-c)
- 35.24" (89.5 cm) tub spout height at outlet
- Contemporary hand shower design of brass construction
- ADA compliant (handles only)
- 1.8 GPM (6.8 LPM) Max, hand shower only

Codes / Standards Compliance

Meets or exceeds the following at date of manufacture:

- ASME A112.18.1/CSA B125.1
- IAPMO/cUPC
- IPC
- ADA & ICC/ANSI A117.1 (handle only)
- Energy Policy Act of 1992
- EPA WaterSense
- California Energy Commission
- ASME A112.18.3 (Back Flow) - Double check valves at hand shower inlet
- All applicable US Federal and State material regulations

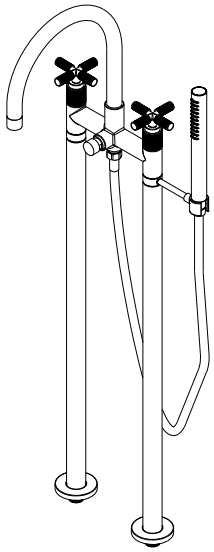

ACCESSORY OPTIONAL

System Element	Rough-In Kit	Tempering Valve
Description	Freestanding Tub Filler Rough-In Kit (Floor Mount)	Thermostatic Mixing Valve (Temperature Regulator)
Inlet/Outlet Size	1/2'' NPT Inlet / 3/4" NPT Outlet	1/2'' Direct Sweat Connection
Part Number	1-469	1-535
Image	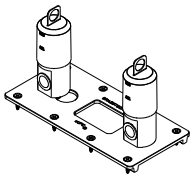	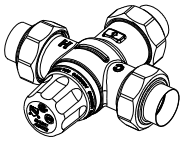

t: 949.417.5207 | www.newportbrass.com

NEWPORT BRASS

PRODUCT DIMENSIONS *(Units are in inches)*

Product Dimensions are provided for reference only. For specific product installation guidelines, please reference the Installation Instructions of the product being installed.

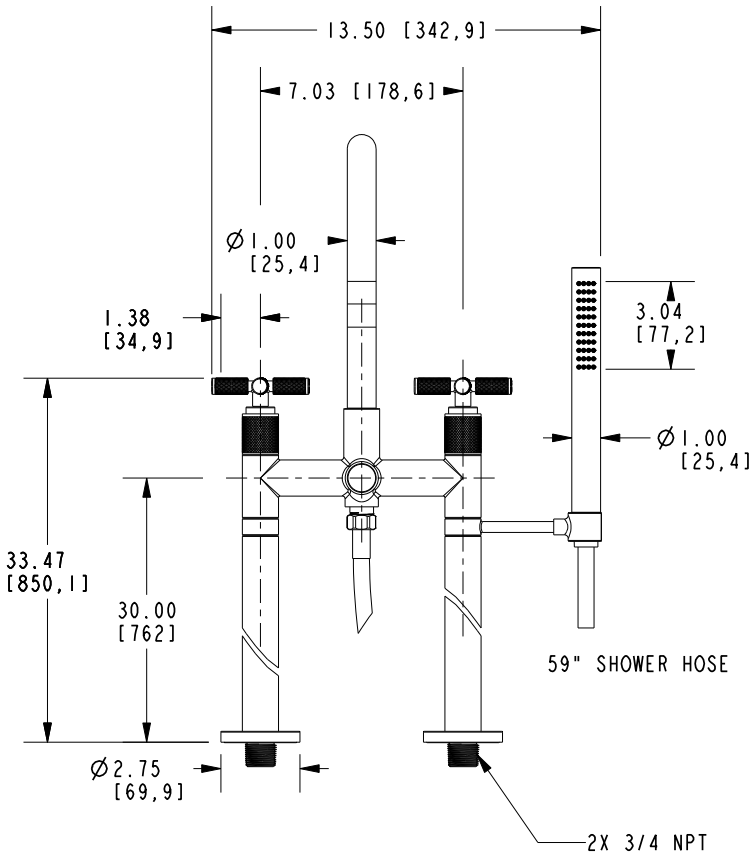

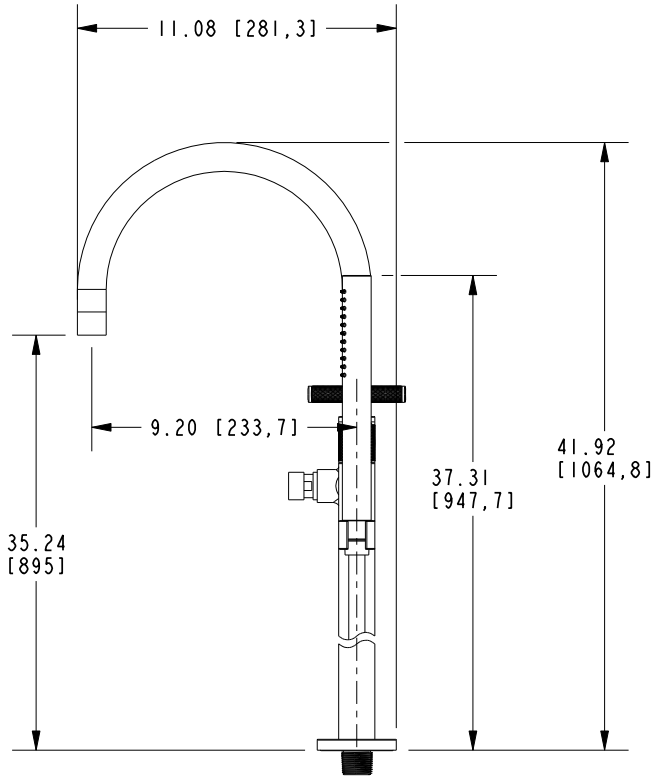

BRIDGE TUB AND HANDSHOWER KIT

3430-4262

Newport Brass reserves the right (1) to make changes in specifications and materials, and (2) to change or discontinue models, both without notice or obligation. See current full-line price book or www.newportbrass.com for finish options and product availability.