NEWPORT BRASS

KIMBELL

TUB AND SHOWER TRIM

5-3432BP

Features

- Solid brass construction
- Face plate with diverter pull-knob and handle assembly
- Intended for use with Newport Brass rough valve(s) - as specified (Required Accessory)
- ADA Complaint (Handles Only)

Codes / Standards Compliance

Meets or exceeds the following at date of manufacture:

- ASME A112.18.1/CSA B125.1
- IAPMO/cUPC
- IPC
- ADA & ICC/ANSI A117.1 (Handle Only)
- All applicable US Federal and State material regulations

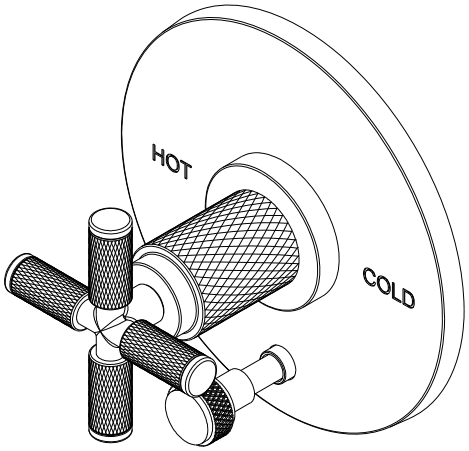

ACCESSORY REQUIRED	
System Element	Tub & Shower Valve
Description	BP Valve
Inlet/Outlet Size	1/2”
Part Number	1-685
Image	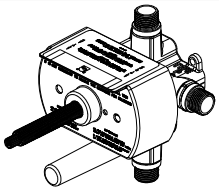

t: 949.417.5207 | www.newportbrass.com

NEWPORT BRASS

PRODUCT DIMENSIONS *(Units are in inches)*

Product Dimensions are provided for reference only. For specific product installation guidelines, please reference the Installation Instructions of the product being installed.

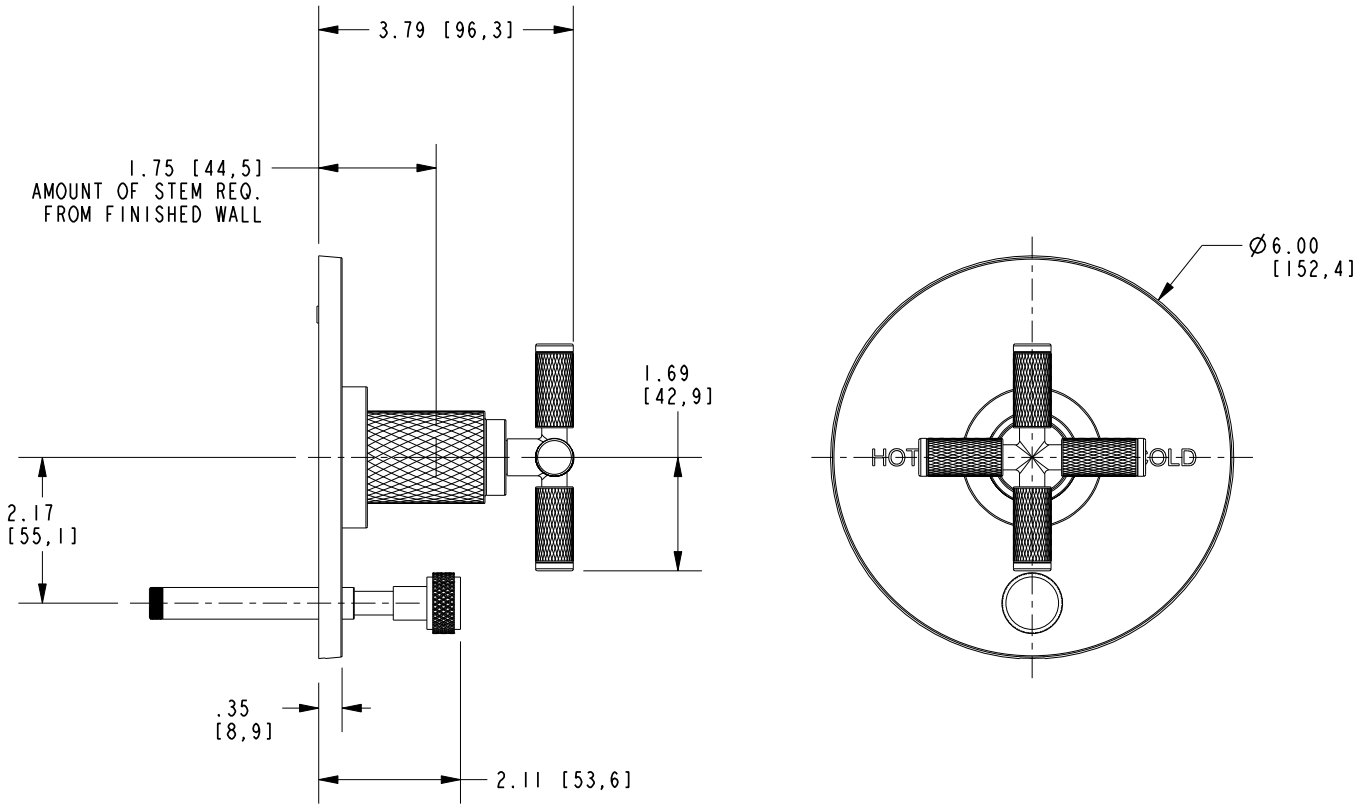

TUB AND SHOWER TRIM

5-3432BP

Newport Brass reserves the right (1) to make changes in specifications and materials, and (2) to change or discontinue models, both without notice or obligation. See current full-line price book or www.newportbrass.com for finish options and product availability.